HITACHI
Inspire the Next

# YUTAKI SERIES
## RHUE-A(V)HN

splitoff.ru

Большая библиотека технической документации
https://splitsystema48.ru/instrukcii-po-ekspluatacii-kondicionerov.html
каталоги, инструкции, сервисные мануалы, схемы.

## Service manual

Air to water
Heat pump

- RHUE-3AVHN
- RHUE-4AVHN
- RHUE-5A(V)HN
- RHUE-6A(V)HN

**Все каталоги и инструкции здесь:** https://splitsystema48.ru/instrukcii-po-ekspluatacii-kondicionerov.html

HITACHI
Inspire the Next

**Specifications in this manual are subject to change without notice in order that HITACHI may bring the latest innovations to their customers.**

**Whilst every effort is made to ensure that all specifications are correct, printing errors are beyond Hitachi's control; Hitachi cannot be held responsible for these errors.**

Все каталоги и инструкции здесь: https://splitsystema48.ru/instrukcii-po-ekspluatacii-kondicionerov.html

**Все каталоги и инструкции здесь:** https://splitsystema48.ru/instrukcii-po-ekspluatacii-kondicionerov.html

HITACHI
Inspire the Next

# Contents

Model codification and accessory codes 0

Units installation 1

Water pipe installation 2

Electrical wiring connections and diagram 3

Control system 4

Available optional functions 5

Test run 6

Troubleshooting 7

Spare parts 8

Servicing 9



Все каталоги и инструкции здесь: https://splitsystema48.ru/instrukcii-po-ekspluatacii-kondicionerov.html

**Все каталоги и инструкции здесь:** https://splitsystema48.ru/instrukcii-po-ekspluatacii-kondicionerov.html

# GENERAL INDEX



1. Units installation ..... 15

1.1. RHUE-(3~6)A(V)HN ..... 17

1.1.1. Transportation ..... 17
1.1.2. Center of gravity ..... 18
1.1.3. Installation space ..... 19
1.1.4. Place provision ..... 20
1.1.5. Optional parts ..... 22

1.2. Accessories Installation ..... 27

1.2.1. Pump kit ..... 27
1.2.2. WEH - Water Electric Heater ..... 28
1.2.3. DHWT - Domestic Hot Water Tank ..... 30

2. Water pipe installation ..... 33

2.1 General notes ..... 34

2.2. Piping work connection considerations ..... 35

2.2.1. Minimum water volume description ..... 35
2.2.2. Correction factor due to use of glycol ..... 37

2.3. Water control ..... 37

2.4. Water check valve ..... 38

2.5. Accessories hydraulic installation ..... 39

2.5.1. Pump kit ..... 39
2.5.2. WEH- Water Electric Heater ..... 40
2.5.3. DHWT- Domestic Hot Water Tank ..... 42
2.5.4. Water drain discharge connection ..... 44

3. Electrical wiring connections and diagram ..... 45

3.1. General check ..... 46

3.2. Electrical wiring connection ..... 47

3.2.1. Field minimum wire sizes for the power source ..... 48
3.2.2. Main switches and fuses ..... 49

3.3. Setting the DIP switches ..... 49

3.4. LED indication ..... 53

3.5. Accessories electrical installation ..... 54

3.5.1. Pump kit ..... 54
3.5.2. WEH- Water Electric Heater ..... 57
3.5.3. DHWT- Domestic Hot Water Tank ..... 59



Все каталоги и инструкции здесь: https://splitsystema48.ru/instrukcii-po-ekspluatacii-kondicionerov.html

3.6. Electrical wiring diagrams....65

3.6.1. Electrical wiring diagram for models RHUE-(3~6)AVHN....66
3.6.2. Electrical wiring diagram for RHUE-(5/6)AHN....67

4. Control system....69

4.1. System configuration, settings and control system....73

4.1.1. Description....73
4.1.2. System controller overview....73
4.1.3. Contents of the controller pack....74
4.1.4. Quick-start installation steps....74
4.1.5. Abbreviations & terminology....75
4.1.6. Application configurations....75
4.1.7. Principle of bi-valent or mono-energetic operation....76
4.1.8. Mono-Valent Systems (CONF 1)....77
4.1.9. Mono-Energetic Systems (CONF 2)....78
4.1.10. Bi-valent Systems - Parallel Operation (CONF3)....79
4.1.11. Bi-Valent System - Parallel Operation - Mixing Loop (CONF 4)....80
4.1.12. Bi-Valent System - Serial Operation (CONF 5)....80

4.2. Supply setpoint calculation....81

4.3. Heating control functions....82

4.3.1. Heating Circuit – General....82
4.3.2. Heating Characteristic Curve (OTC Control)....82
4.3.2.1. Room Setpoint Parallel Shift....83
4.3.2.2. Room Temperature Compensation....84
4.3.3. Heating Circuit Minimum/Maximum Temperature Limits....84
4.3.4. Heating Circuit (Secondary) Pump....85
4.3.5. Automatic No-Load Function....85

4.4. DHW control functions....85

4.4.1. DHW Storage Tank Loading....85
4.4.2. DHW Control....86
4.4.3. Maximum DHW Loading Time....87
4.4.4. DHW Electric Heater....88
4.4.4.1. DHW Electric Heater....88
4.4.4.2. Using the Boiler for DHW loading....89
4.4.5. Using the Boiler for DHW loading....90
4.4.6. Response of the Heat pump to a DHW demand....90
4.4.7. DHW Time Program....90

4.5. Heatpump control functions....91

4.5.1. Heatpump Control....91
4.5.2. Heatpump Setting Control Signal....92
4.5.3. Heatpump Sensor Offset....92
4.5.4. Heatpump Maximum Return High Limit....93
4.5.5. Heatpump Operating Limits....93
4.5.6. Tariff Switch (Heat Pump blocking) Input....94



Все каталоги и инструкции здесь: https://splitsystema48.ru/instrukcii-po-ekspluatacii-kondicionerov.html

4.6. Boiler control functions ..... 95

4.6.1. Boiler Control ..... 95
4.6.2. Supply-Return Difference Check ..... 96
4.6.3. Boiler Minimum On / Off Times ..... 97
4.6.4. Boiler Waiting Time ..... 97
4.6.5. Maximum Outdoor Temperature for Boiler Operation ..... 97

4.7. Electric heater control functions ..... 98

4.7.1. Electric Heater Control ..... 98
4.7.2. Supply-Return Difference Check ..... 99
4.7.3. Electric Heater Waiting Time ..... 100
4.7.4. Electric Heater Return High Limit Check ..... 100
4.7.5. Maximum Outdoor Temperature for Electrical Heater Operation ..... 101

4.8. Mixing valve control functions ..... 101

4.8.7. Mixing Valve Control ..... 101
4.8.2. Mixing / Bypass Valve Control ..... 102
4.8.3. Mixed Heating Circuit Maximum Temperature Limit Protection ..... 102
4.8.4. Mixing Valve Opening Delay ..... 102

4.9. General functions ..... 103

4.9.1. System Frost Protection ..... 103
4.9.2 Automatic Summer Switch-Off ..... 103
4.9.3. Pump and Valve Seizure Protection ..... 104
4.9.4. Screed Function (Drying for New Floors) ..... 104

4.10. Parameter tables ..... 105

4.10.1 Installer Parameters ..... 105
4.10.1. Engineering Parameters ..... 106

4.11. Conversion table: heat pump supply temperature to mA ..... 108

4.12. R resistance tables ..... 108

4.13. Technical data ..... 109

4.13.1. System Controller (XEK23232 A) ..... 109
4.13.2. Water Temperature Sensor (XEK35524 A) ..... 109
4.13.3. Outdoor Temperature Sensor (XEK35438 A) ..... 109

4.14. Mounting ..... 110

4.14.1. Fitting or removing the front cover ..... 110
4.14.2. Wall Mounting ..... 110
4.14.3. Mounting on a DIN-rail ..... 111

4.15. Mounting the Sensors ..... 111

4.15.1. Water Temperature Sensor ..... 111
4.15.2. Outside Temperature Sensor ..... 112





Все каталоги и инструкции здесь: https://splitsystema48.ru/instrukcii-po-ekspluatacii-kondicionerov.html

4.16. Electrical wiring ..... 113

4.16.1. Wiring access ports ..... 113
4.16.1. Wiring connections ..... 114
4.16.2 System component connections ..... 115

4.17. System configurations ..... 118

4.18. User interface ..... 123

4.18.1. Display ..... 123
4.18.2. Controls ..... 123

4.19. Installation configuration settings ..... 124

4.19.1. Reviewing and setting the installer parameters ..... 124
4.19.2. Installer parameter list ..... 125

4.20. System testing ..... 126

4.20.1. System start-up ..... 126
4.20.2. SYSTEM TEST ..... 126
4.20.3. REVIEWING THE OPERATIONAL DATA ..... 127
4.20.4. MANUALLY OVERRIDING THE OUTPUTS ..... 127

4.21. Expanding the system ..... 128

4.21.1. Additional mixing zone ..... 128
4.21.2. Binding RF components together ..... 129

4.22. System MMI Pack (Room unit and RF receiver) ..... 129

4.22.1. Room Unit installation guide ..... 129
4.22.1.1. Description ..... 129
4.22.1.2. Installation information ..... 130
4.22.1.3. Installing the System MMI Pack ..... 130
4.22.1.4. Installing the RF Receiver ..... 131
4.22.2. Installing the Room Unit ..... 132
4.22.2.1. Power up ..... 132
4.22.2.2. RF Communication check (test mode) ..... 132
4.22.2.3. Locating the Room Unit ..... 133
4.22.3. Communication loss ..... 133
4.22.4. Installer mode ..... 134
4.22.4.1. Entering installer mode ..... 134
4.22.4.2. Fail-Safe mode setup ..... 134
4.22.4.3. Using the Room Unit for specific applications ..... 135
4.22.4.4. Using the special features of the Room Unit ..... 135
4.22.5. Installer parameters table ..... 136
4.22.5.1. Category 1 - Room Unit settings ..... 136
4.22.5.2. Category 2 - System settings ..... 137
4.22.6. Binding / Rebinding procedure ..... 137
4.22.7. Room Unit user guide ..... 138
4.22.7.1. Setting-up ..... 139
4.22.7.2. Programming ..... 140
4.22.7.3. Operating ..... 142

4.23. Device control system ..... 143



Все каталоги и инструкции здесь: https://splitsystema48.ru/instrukcii-po-ekspluatacii-kondicionerov.html

4.24. Yutaki unit PCB ..... 144

4.25. Safety and control device setting ..... 145

4.25.1. Defrost operation control ..... 147
4.25.2. Control of expansion valve ..... 149

5. Available optional functions ..... 151

5.1. Freeze protection ..... 152

5.2. Restart after power failure ..... 152

5.3. Compressor ON/OFF control ..... 153

5.4. 3 Minutes guard control ..... 154

5.5. Power save mode ..... 154

6. Test run ..... 155

6.1. Checking procedure before the test run ..... 156

6.2. Test run procedure for Yutaki ..... 158

6.2.1. System controller testing ..... 160

7. Troubleshooting ..... 165

7.1. Initial troubleshooting ..... 166

7.1.1. Unit and System controller - Power Supply failure ..... 166
7.1.2. Abnormal operation of the devices ..... 168
7.1.3. Incidents of operation ..... 174

7.2. Troubleshooting procedure ..... 175

7.2.1. Alarm code ..... 177

7.3. Failure diagnosis method ..... 216

7.4. Checking procedure for main parts ..... 218

7.4.1. RHUE-(3~6)AVHN. Procedure for checking the DIP-IPM. ..... 218
7.4.2. RHUE-(5/6)AHN. Procedure for checking the ISPM. ..... 220
7.4.3. Checking capacitors CB1 & CB2. ..... 222
7.4.4. Fault diagnosis of DC fan motor. ..... 223

7.5. Troubleshooting of control system ..... 225

7.5.1. System controller ..... 225
7.5.2. System MMI Pack ..... 226



Все каталоги и инструкции здесь: https://splitsystema48.ru/instrukcii-po-ekspluatacii-kondicionerov.html

7.6. Troubleshooting of accessories ..... 227

7.6.1. Pump kit ..... 227
7.6.2. WEH - Water Electric Heater ..... 228
7.6.3. DHWT - Domestic Hot Water Tank ..... 228

8. Spare parts ..... 229

8.1. Spare parts of Yutaki ..... 230

8.1.1. Cycle and estructural parts ..... 230
8.1.2. Electrical parts ..... 231

8.2. Spare parts of accessories ..... 233

8.2.1. WEH - Water Electric Heater ..... 233
8.2.2. DHWT - Domestic Hot Water Tank ..... 234

9. Servicing ..... 237

9.1. RHUE-(3~6)A(V)HN ..... 239

9.1.1. Removing service cover ..... 239
9.1.2. Removing air outlet grille ..... 239
9.1.3. Removing upper cover ..... 240
9.1.4. Removing the lower part of service panel and rear panel ..... 240
9.1.5. Removing Yutaki fan motor ..... 241
9.1.7. Removing the compressor ..... 242
9.1.6. Mounting Yutaki fan motor ..... 242
9.1.8. Removing high pressure switch ..... 245
9.1.9. Opening electrical box (P-mounting plate) ..... 246
9.1.10. Removing the coils for the reversing and solenoid valves ..... 247
9.1.11. Removing electronic expansion valve coils ..... 248
9.1.12. Removing pressure switches ..... 249
9.1.13. Removing reversing valve ..... 250
9.1.14. Removing expansion valves ..... 250
9.1.15. Removing solenoid valve ..... 251
9.1.16. Removing electrical components ..... 252
9.1.17. Removing inverter components ..... 253
9.1.18. Removing the ISPM ..... 254
9.1.19. Removing the DIP-IPM ..... 255
9.1.20. Removing the electrical-noise filter ..... 256
9.1.21. Removing other electrical components ..... 257



Все каталоги и инструкции здесь: https://splitsystema48.ru/instrukcii-po-ekspluatacii-kondicionerov.html

# 0. MODEL CODIFICATION AND ACCESSORY CODES



## ◆ Unit code list

List of air to water units and accessories available in this Service Manual.

### YUTAKI RHUE UNITS

| AVHN UNITS | | AHN UNITS | |
|---|---|---|---|
| Unit | Code | Unit | Code |
| RHUE-3AVHN | 9E311100 | | |
| RHUE-4AVHN | 9E411100 | | |
| RHUE-5AVHN | 9E511100 | RHUE-5AHN | 9E531100 |
| RHUE-6AVHN | 9E611100 | RHUE-6AHN | 9E631100 |
| 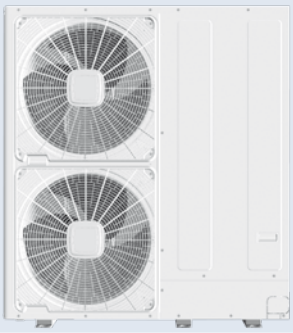 | | 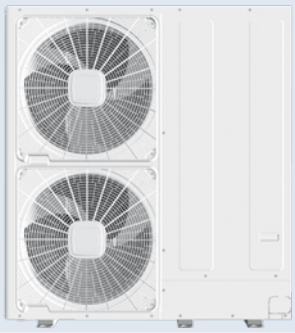 | |
| 1~ | | 3N~ | |

Meaning of model codification: **RHUE - 5 A V H N**

- Unit type (made in Europe)
- Compressor power (HP) 3/4/5/6
- Air-to-water unit
- Single phase
- Heating only
- R410A Refrigerant



Все каталоги и инструкции здесь: https://splitsystema48.ru/instrukcii-po-ekspluatacii-kondicionerov.html

## LIST OF ACCESSORY CODES

| Name | Description | Code | Figure |
|---|---|---|---|
| STE1 | Water temperature sensor | 9E500004 | |
| RMPID1 | Extension controller | 9E500005 | |
| Pump Kit A | Pump kit A (TOP-S 25/7) | 9E500006 | |
| Pump Kit B | Pump Kit B (TOP-S 25/10) | 9E500007 | |
| EH61 | Heater 6 kW | EH61 | |
| BDHM1 | Hydraulic separator | BDHM1 | |
| VID3V1 | 3-way valve | VID3V1 | 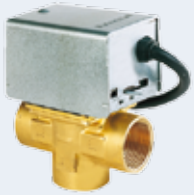 |
| CDH2Z1 | Disconnection vessel | CDH2Z1 | 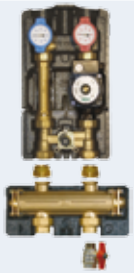 |
| ASMSH1 | Aquastat | ASMSH1 | 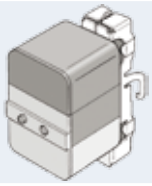 |



Все каталоги и инструкции здесь: https://splitsystema48.ru/instrukcii-po-ekspluatacii-kondicionerov.html

| Name | Description | Code | Figure |
|---|---|---|---|
| Domestic Hot Water Tank Enamelled / 200L. | DHWT200E-2.5H1E, 1~230V 50Hz | 70544000 | |
| Domestic Hot Water Tank Enamelled / 300L. | DHWT300E-2.5H1E, 1~230V 50Hz | 70544001 | |
| Domestic Hot Water Tank Stainless / 200L. | DHWT200S-2.5H1E, 1~230V 50Hz | 70544100 | |
| Domestic Hot Water Tank Stainless / 300L. | DHWT300S-2.5H1E, 1~230V 50Hz | 70544101 | |



Все каталоги и инструкции здесь: https://splitsystema48.ru/instrukcii-po-ekspluatacii-kondicionerov.html

**Все каталоги и инструкции здесь:** https://splitsystema48.ru/instrukcii-po-ekspluatacii-kondicionerov.html

# 1. UNITS INSTALLATION

This chapter provides information concerning the installation of Yutaki units.

## CONTENTS

1.1. RHUE-(3~6)A(V)HN ..... 17

1.1.1. Transportation ..... 17
1.1.2. Center of gravity ..... 18
1.1.3. Installation space ..... 19
1.1.4. Place provision ..... 20
1.1.5. Optional parts ..... 22

1.2. Accessories Installation ..... 27

1.2.1. Pump kit ..... 27
1.2.2. WEH - Water Electric Heater ..... 28
1.2.3. DHWT - Domestic Hot Water Tank ..... 30





Все каталоги и инструкции здесь: https://splitsystema48.ru/instrukcii-po-ekspluatacii-kondicionerov.html

**DANGER**

- *Electrical hazard. Risk of death.*
  - *Before gaining access to terminals or performing any maintenance operation, turn OFF all power switches and disconnect all supply circuits.*
- *Check that the LED201 (red) located on the DIP-IPM is OFF.*
- *Do not touch the electrical components when LED201 (Red) is ON in order to avoid an electrical shock.*
- *Do not touch the electrical components of the PCB directly.*

**WARNING**

- *Damage by water. Electrical hazard.*
- *Install the unit indoors to prevent water contact. The water proof class is IPX0.*
- *Install the unit where no high level of oil mist, salty air or sulphurous atmosphere exists.*
- *Attach a water proof cover in order to prevent water getting into the unit when installing.*
- *Risk of explosion. A fire may occur. Use of inflammable agent may cause explosion or fire. For cleaning operation, use non-inflammable and nontoxic cleaning liquid.*
- *Oxygen deficiency. Toxic gases may be produced. Work with sufficient ventilation. Working in an enclosed space is dangerous. Toxic gas may be produced when cleaning agent is heated to high temperature by, e.g., being exposed to fire.*
- *Electric shock. Electrical hazard. In order to avoid electric shock or fire, pay attention not to clamp cables when attaching the service cover.*
- *Electrical hazard. Electrical discharge. This unit contains condensers that might remain charged once the unit is switched off. Wait at least five minutes after the stop of the unit before to start any cleaning or maintenance operation, allowing the discharge of the condensers.*

**CAUTION**

- *Malfunction. Unit failure. When installing more than one unit together, keep clearance of more than 500 mm between units and avoid obstacles that could hamper air intake.*
- *Malfunction. Short circuit. Keep cleareance of more than 3000 mm between the wall (without vent holes) and air inlet/outlet.*
- *Electromagnetic contamination. Equipment failures. Install the unit as far as possible (being at least 3 meters) from electromagnetic wave radiator, such as medical equipment.*
- *Overheat of the unit. Malfunction. Install the unit in the shade or not exposed to direct sunshine or direct radiation from high temperature heat source.*
- *Sharp fins. Risk of injury. Aluminium fins have very sharp edges. Pay attention to the fins in order to avoid injury. Use gloves.*

**NOTE**

- *This appliance is not intended to be used by people (including children) with reduced physical, sensory or mental capabilities, or lack of experience and knowledge, unless they have been given supervision and instruction concerning the use of the appliance by a person responsible for their safety.*
- *For easy operation and maintenance, install the unit with sufficient clearance around it as shown in the next pages.*
- *Transport the package as close as possible to the intallation location before unpacking.*
- *Make sure that the foundation is flat, levelled and strong enough.*
- *Install the unit in a place where no seasonal wind might directly blow into the outdoor fan.*
- *Install the unit in a restricted area not accessible by the general public.*
- *Cleaning liquid shall be collected after cleaning operation.*



Все каталоги и инструкции здесь: https://splitsystema48.ru/instrukcii-po-ekspluatacii-kondicionerov.html

# 1.1. RHUE-(3~6)A(V)HN

## 1.1.1. Transportation

| | WARNING |
|---|---|
| - | *Malfunction. Unit failure. Do not put any foreign material into the unit and make sure that none exists inside the unit before the installation or test run.* |



- **Hanging method**

When hanging the unit, ensure its balance and lift it up smoothly and safely. Do not remove any packing materials until the unit is positioned and hang the unit under packing condition with two ropes, as shown in the figure below.

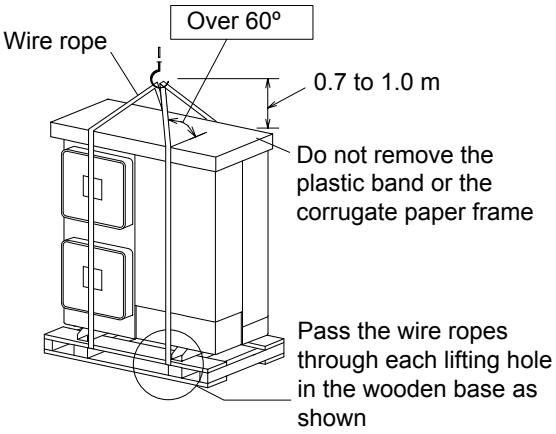


| | WARNING |
|---|---|
| - | *Crush hazard. Can cause seriour injury.* |
| | - *Lift the unit with 2 wire ropes and without removing its factory packaging. Make sure that the unit is lifted smoothly and does not lean.* |
| | - *Do not attach lifting equipment to the plastic band or the corrugated paper frame, since the ropes might slip or break the materials.* |

| | NOTE |
|---|---|
| - | *Make sure that the exterior of the unit is adequately protected with cloth or paper.* |
| - | *Do not hold the unit with the handles or the air outlet parts. Steel plates may be deformed. Use gloves.* |



Все каталоги и инструкции здесь: https://splitsystema48.ru/instrukcii-po-ekspluatacii-kondicionerov.html

### 1.1.2. Center of gravity

When the unit is lifted manually (using the handles), pay attention to the following: do not remove the wooden base from the unit to prevent its overturning. Pay attention to the center of gravity shown in the below figure.

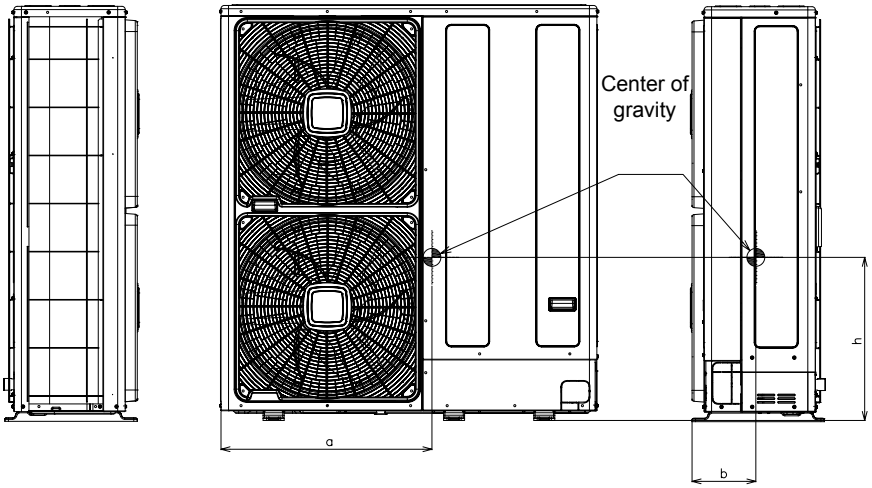


| Unit model | Operation weight (kg) | Center of gravity position (mm) | | |
|---|---|---|---|---|
| | | a | b | h |
| RHUE-3AVHN | 130 | 705 | 223 | 545 |
| RHUE-4AVHN | 130 | 705 | 223 | 545 |
| RHUE-5AVHN | 135 | 695 | 228 | 560 |
| RHUE-5AHN | 140 | 695 | 228 | 560 |
| RHUE-6AVHN | 139 | 695 | 228 | 560 |
| RHUE-6AHN | 144 | 695 | 228 | 560 |

***NOTE***

- *It is recommended that at least two people participate when lifting is done manually.*



Все каталоги и инструкции здесь: https://splitsystema48.ru/instrukcii-po-ekspluatacii-kondicionerov.html

## 1.1.3. Installation space

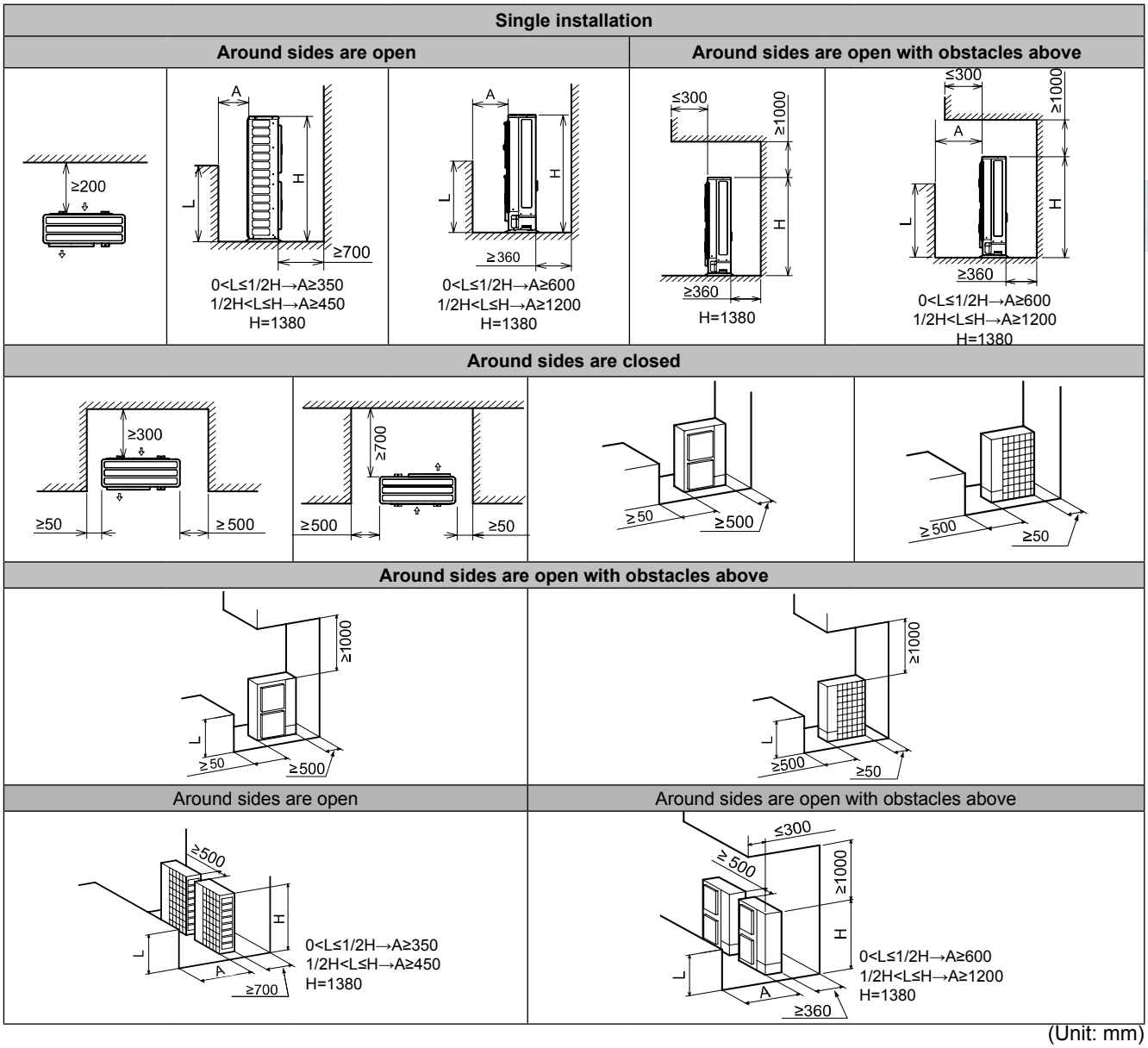


(Unit: mm)

| | NOTE |
|---|---|
| - | *All measuring units are in milimetres (mm).* |



Все каталоги и инструкции здесь: https://splitsystema48.ru/instrukcii-po-ekspluatacii-kondicionerov.html

## 1.1.4. Place provision

- **Concrete Foundation**
  - Foundation shall be on a level surface and it is recommended to be 100-300 mm higher than ground level.
  - Use M10 anchor bolts to fix the unit to the foundation. (Foundation bolts, nuts and washers are not included, and must be field supplied).
  - Drain water might turn into ice on cold weather areas. Therefore, when installing the unit on a roof or a veranda, avoid the draining on a public area since it may become slippery.

❶ Drain water

❷ Drain water place

❸ Concrete base

❹ Foundation bolt

❺ Mortar charge

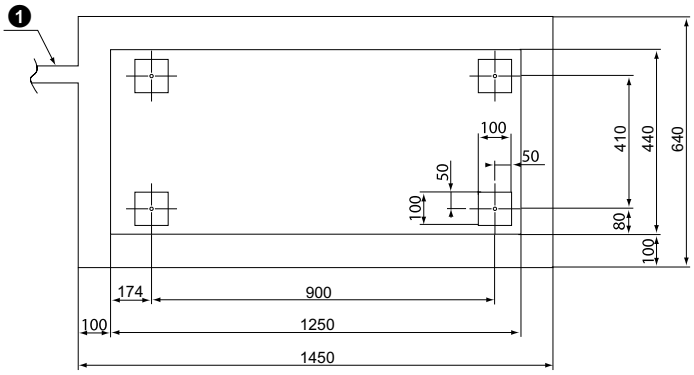


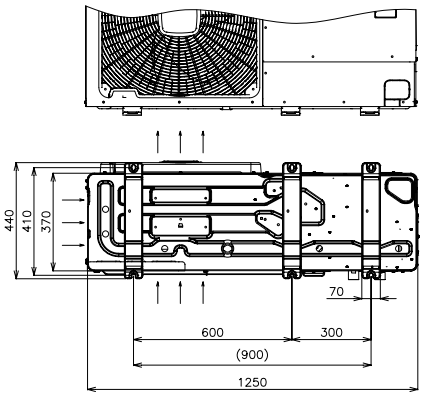


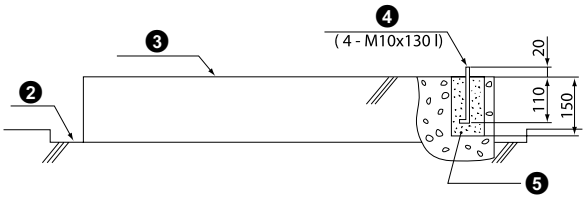


- The whole of the base of the Yutaki unit should be installed on a foundation. When using vibration-proof mat, it should also be positioned the same way. When installing the Yutaki unit on a fieldsupplied frame, use metal plates to adjust the frame width for stable installation as shown in below figure.

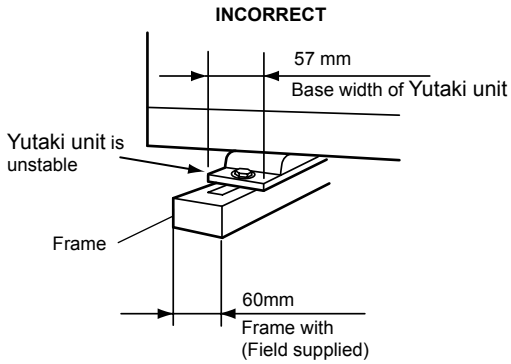


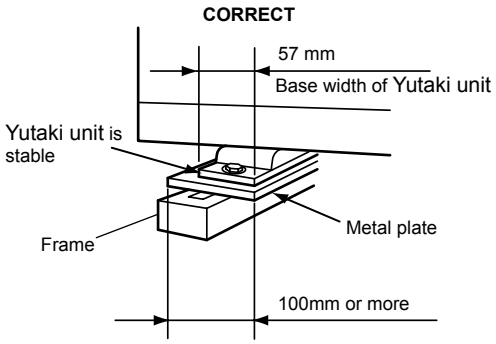


Recommended Metal Plate Size
- (Field-Supplied) Material: Hot-Rolled Mild Steel
- Plate (SPHC) Plate Thickness: 4.5 T

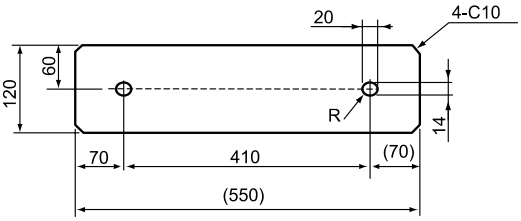




Все каталоги и инструкции здесь: https://splitsystema48.ru/instrukcii-po-ekspluatacii-kondicionerov.html

The foundation drawing shown previously is an example.

- The unit is low-vibration model, but consider using some floor reinforcement or anti-vibration mat/rubber when vibration should occur due to weakness of attached surface.
- The foundation shall be unified with the floor slab. If not, calculate the vibration proof of the installation of Yutaki Unit as well as of the Yutaki Unit with the foundation in order to ensure strength against a fall or for when the unit has to be moved.
- Drain water and rainwater are discharged from the bottom of the unit when in operation as well as when stopped.
- Choose a location with good drainage or place a water drain as in the drawing.
- Make the foundation flat and waterproof, as a water pool may appear in case of, for instance, rain.
- This is a low-profile product with a shallow depth. It may also be able to fix on the wall as shown below when fixing only with the foundation bolt does not seem sufficiently stable depending on the conditions of the installation. (Metal fittings must be field supplied).



- **Fix unit to the wall**

1. Fix the unit onto the wall as indicated in the figure. (Stay field supplied).
2. The foundation shall be strong enough to avoid any deformation and vibration.
3. In order to prevent vibration transfer to the building, place rubber material between the stay and the wall.

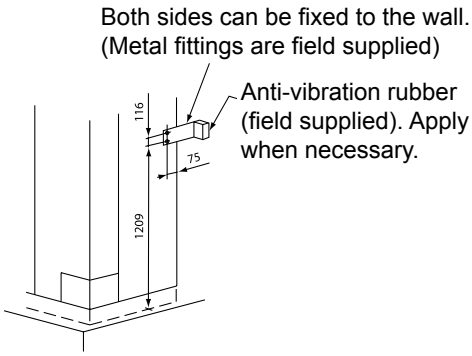


| | WARNING |
|---|---|
| - *Crush hazard. Can cause serious injury.*<br>- *Installation must ensure that the unit will not incline, vibrate, make noise or fall down by a blast of wind or in an earthquake.*<br>- *Calculate quake-resistance strength to ensure that installation is strong enough against falling. Fix the unit with wires (field supplied) when installing in a location without walls or windbreak and likely exposed to a blast of wind.* | |



Все каталоги и инструкции здесь: https://splitsystema48.ru/instrukcii-po-ekspluatacii-kondicionerov.html

- **Installing location where the unit will be exposed to strong wind**

Strong winds against the unit´s air outlet causes short circuits and these can be the consequences:

- Lack of air flow and adversely affect to normal function.
- Frequent frost acceleration.
- Fan can rotating very fast until it breaks.

Follow the instructions below to install on a rooftop or a location without surrounding buildings, where strong wind is expected against the unit.

1. Choose a location where the outlet or inlet side of the product will not be exposed to strong wind.
2. In case the fulfillment of point 1 is not possible, it is recommended to use the optional parts (see section Optional parts and installation for RHUE-(3~6)A(V)HN).

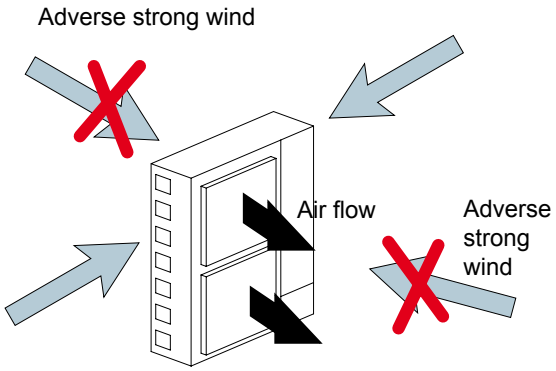


| | CAUTION |
|---|---|
| - | *Strong wind. Damage to fan motor. Excessive strong wind against the unit outlet may cause inverse rotation and damage the fan motor.* |

## 1.1.5. Optional parts

- **Air flow guide, wind guard and snow protection hood**

| Optional parts | | | HP | Model |
|---|---|---|---|---|
| Air flow guide | | | (3~6) | AG-335A X 2 |
| Wind guard | | | | WSP-335A X 2 |
| Snow protection hood | Stainless plate (SUS304) | Air outlet | | ASG-NP335F X 2 |
| | | Air inlet of rear side | | ASG-NP335B |
| | | Air inlet of side face | | ASG-NP335L |
| | | Air outlet | | ASG-NP335F X 2 |
| | | Air inlet of rear side | | ASG-NP335B |
| | | Air inlet of rear side | | ASG-NP335L |
| | Zinc plate | Air outlet | | ASG-NP335FS X 2 |
| | | Air inlet of rear side | | ASG-335BS |
| | | Air inlet of side face | | ASG-NP335LS |
| | | Air outlet | | ASG-NP335FS X 2 |
| | | Air inlet of rear side | | ASG-NP335BS |
| | | Air inlet of rear side | | ASG-NP335LS |

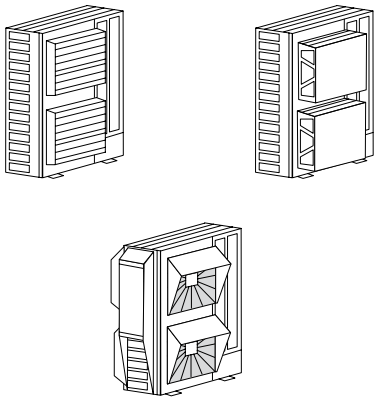



Все каталоги и инструкции здесь: https://splitsystema48.ru/instrukcii-po-ekspluatacii-kondicionerov.html

- **Air flow guide**

Specifications

| Model | AG-335A |
|---|---|
| Quantity | 2 per unit |
| Air discharge direction | Upward (downward), left & right |
| Material | Weather proof polypropylene resin |
| Color | Gray |
| Weight | 1.9 kg |
| Accessories | Fixing screw x 4 [M5 (SUS) x 20]<br>Installation manual |
| Installation restriction | "Wind Guard" or "Snow protection hood" is not available to install with air flow guide. ("Guard net" is available to be installed together.) |

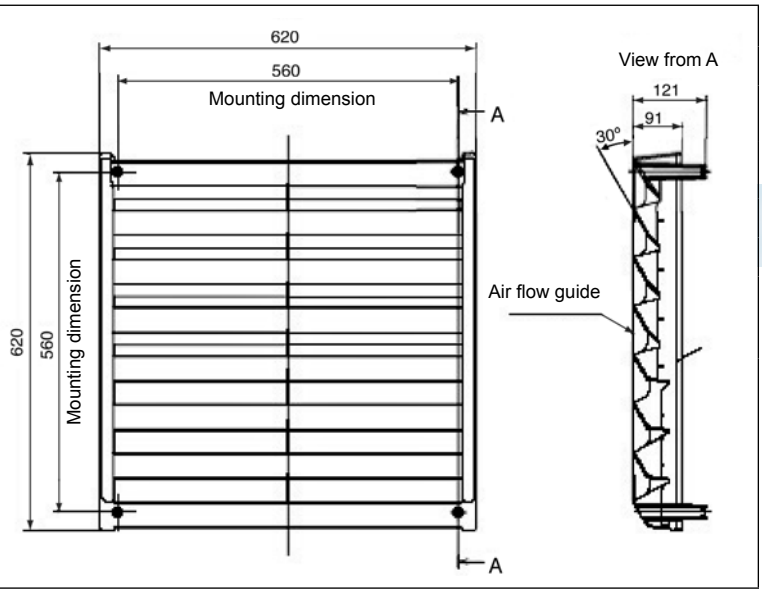


- Attaching example of air flow guide
  - Attach the air flow guide to the air discharge grille with four (4) screws (supplied).
  - The fixing holes are located at 4 positions on the grille. (Screw tightening torque 2.4~3.1N.m)
  - Do not remove the air discharge grille for air flow guide installation.

| | WARNING |
|---|---|
| - | *Rotating fan blades. Risk of cut. If the air guide is installed without discharge grille, it may cause injury due to rotating fan.* |

**Two windbreak covers installation**

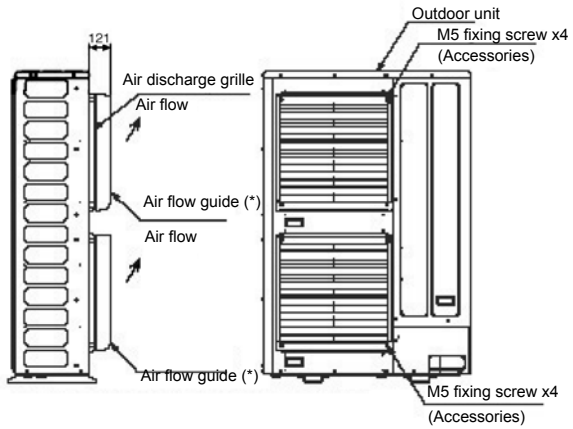


(*) Air flow direction of both air flow guides should be the same

**Service space (In case of upward air discharge)**

- In case of right and left sides air discharge, enough space for air discharge is required.
- The downward air discharge is also available. In such case, install the base under the unit to secure enough space for air discharge.
- In case of serial units installation, air discharge should be upward.

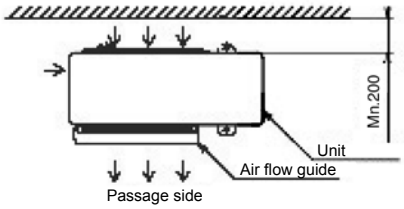




Все каталоги и инструкции здесь: https://splitsystema48.ru/instrukcii-po-ekspluatacii-kondicionerov.html

- **Wind guard**

Specifications

| Model | WSP-335A |
|---|---|
| Quantity | 2 per unit |
| Material | Galvanized sheet metal + baked painting |
| Color | Gray (1.oY8.5/0.5) |
| Weight | 5.5 kg |
| Accessories | Fixing screw x 4 [M5 (SUS) x 20]<br>Installation manual |
| Installation restriction | “Guard net”, “Air flow guide” or “Snow protection hood” is not available to install with Wind guard |

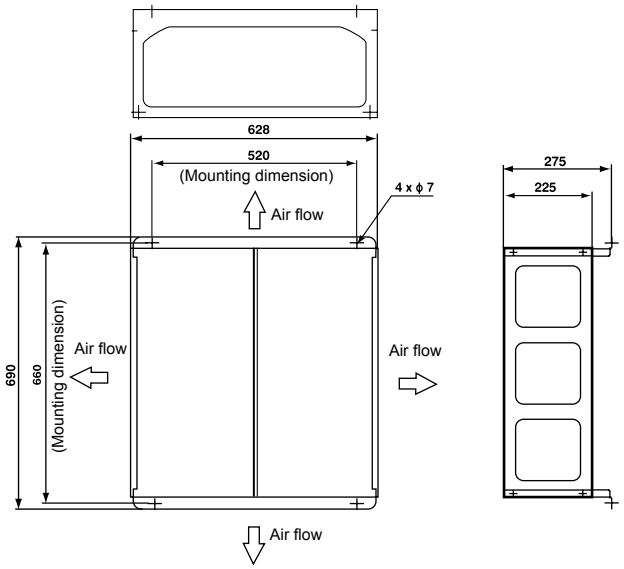


- Attaching example of air wind guard
  - Attach the air flow guide to the air discharge grille with four (4) screws (supplied).
  - The fixing holes are located at 4 positions on the grille. (Screw tightening torque 2.4~3.1N.m)
  - Do not remove the air discharge grille for air flow guide installation.

| | CAUTION |
|---|---|
| - | *Rotating fan blades. Risk of cut. If the air guide is installed without discharge grille, it may cause injury due to rotating fan.* |

**Two windguard covers installation**

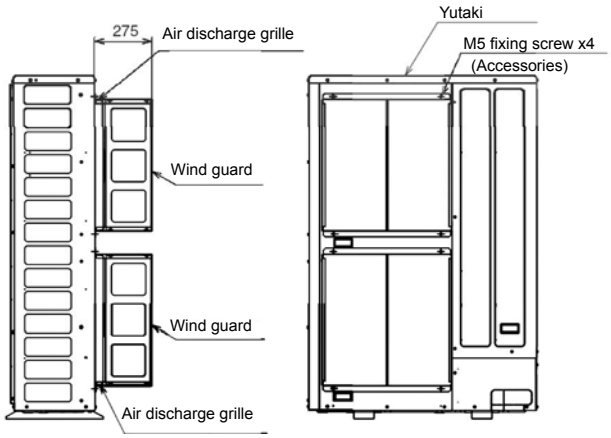


**Service space**

- Both sides of the unit should be open.
- No obstacles should be placed in the air discharge side.

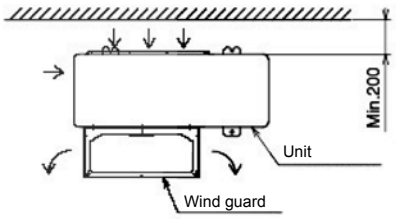




Все каталоги и инструкции здесь: https://splitsystema48.ru/instrukcii-po-ekspluatacii-kondicionerov.html

- **Snow protection hood**

Air discharge hood

| No. | Part name | Qty. |
|---|---|---|
| 1 | Right side plate | 1 |
| 2 | Left side plate | 1 |
| 3 | Front panel | 1 |
| 4 | Stay | 4 |

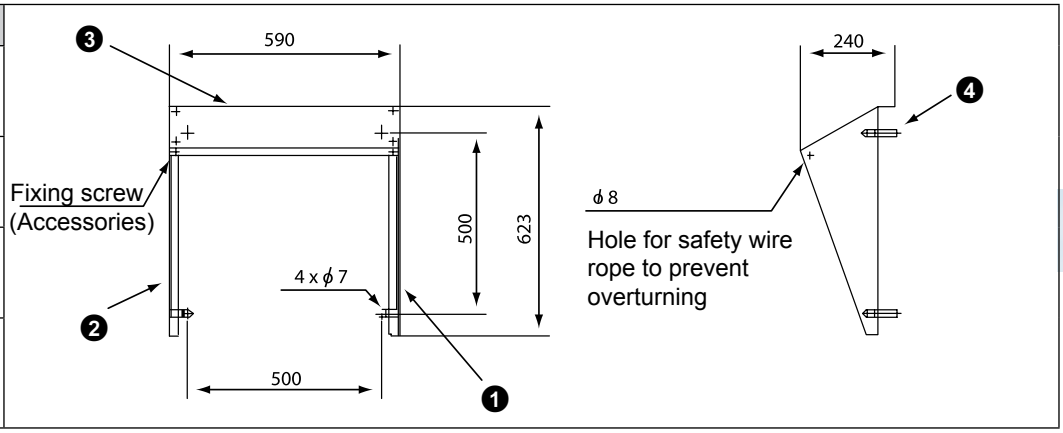


Rear suction hood

| No. | Part name | Qty. |
|---|---|---|
| 1 | Upper right side plate | 1 |
| 2 | Upper left side plate | 1 |
| 3 | Upper front panel (Upside) | 1 |
| 4 | Upper front panel (Downside) | 1 |
| 5 | Lower right side plate | 1 |
| 6 | Lower left side plate | 1 |
| 7 | Upper front panel (Upside) | 1 |
| 8 | Upper front panel (Downside) | 1 |

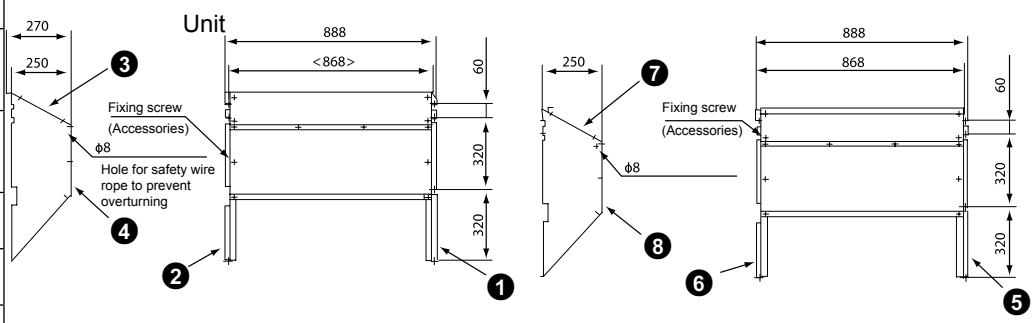


Left suction hood

| No. | Part name | Qty. |
|---|---|---|
| 1 | Right side plate | 1 |
| 2 | Left side plate | 1 |
| 3 | Front panel (Upside) | 1 |
| 4 | Front panel (Downside) | 1 |

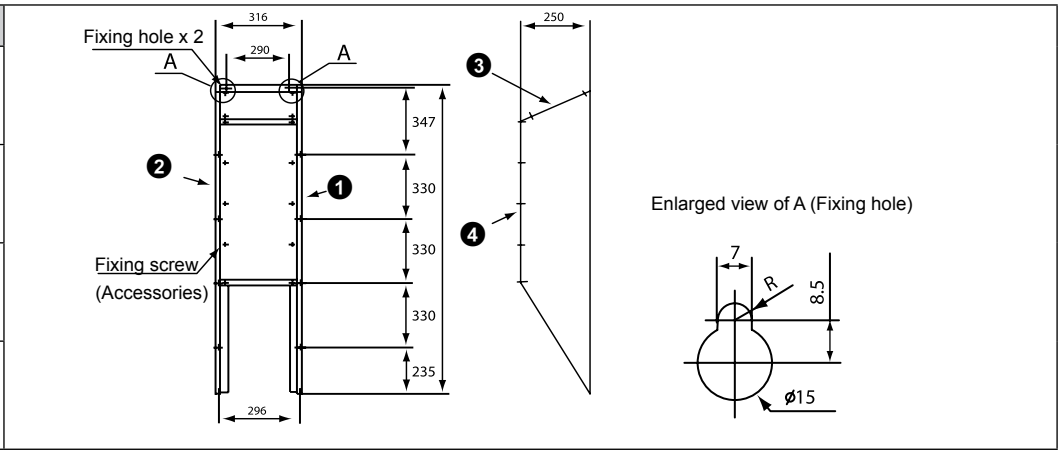




Все каталоги и инструкции здесь: https://splitsystema48.ru/instrukcii-po-ekspluatacii-kondicionerov.html

- Attaching example of snow protection hood

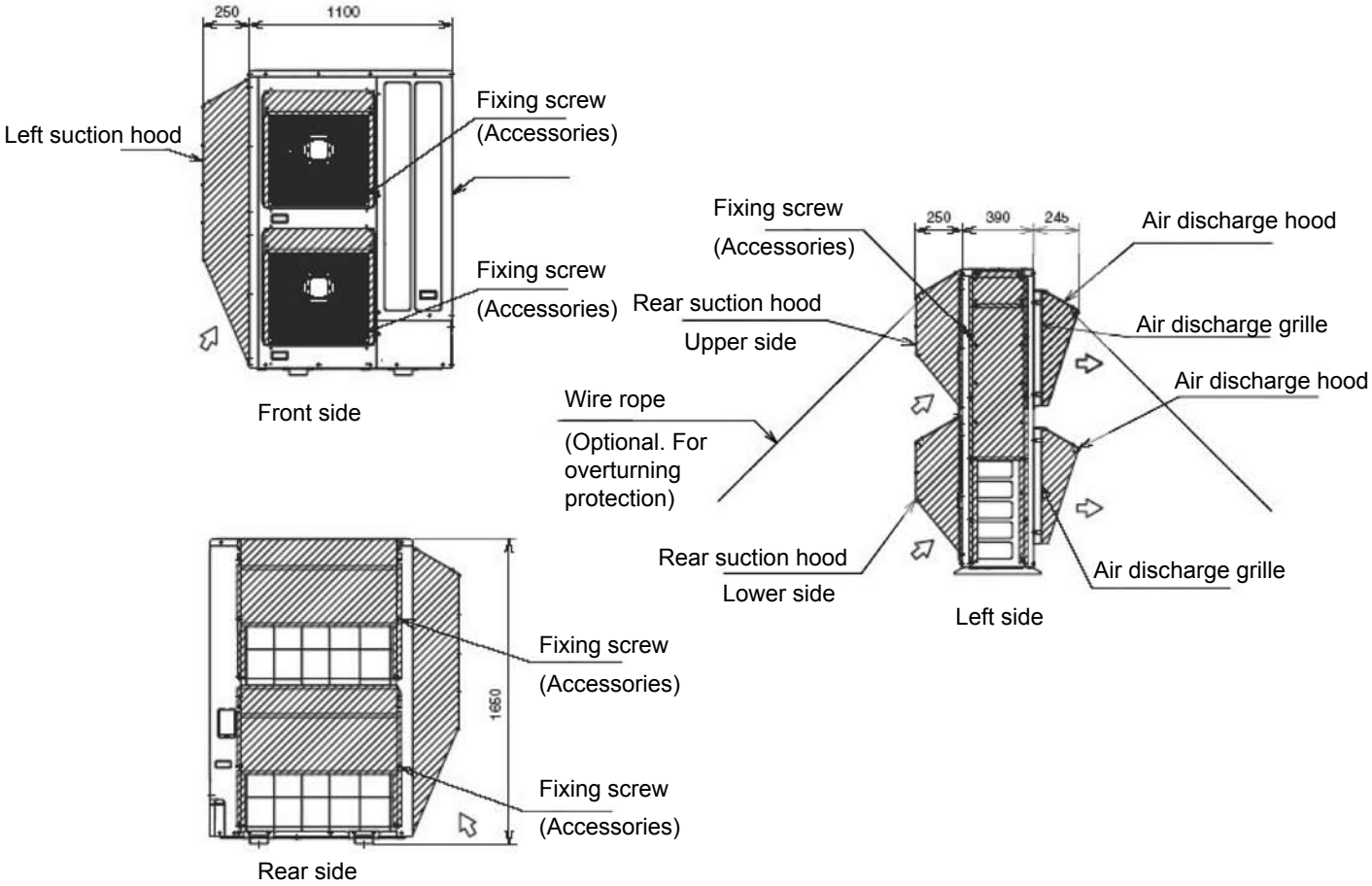


Specifications of snow protection hood

| Product name | | Air discharge hood | | Rear suction hood | | Left suction hood | |
|---|---|---|---|---|---|---|---|
| Model | | ASG-NP335F | ASG-NP335FS | ASG-NP335B | ASG-NP335BS | ASG-NP335L | ASG-NP335LS |
| Quantity | | 2 per unit | | 1 per unit | | | |
| Material | | Bonderized steel sheet Iron | Stainless (SUS304) | Bonderized steel sheet Iron | Stainless (SUS304) | Bonderized steel sheet Iron | Stainless (SUS304) |
| Color | | Gray (1.0Y8.5/0.5 or approximation) | - | Gray (1.0Y8.5/0.5 or approximation) | | Gray (1.0Y8.5/0.5 or approximation) | - |
| Weight | | 3 kg | | 14 kg | | 8 kg | |
| Assembling | | Knockingdown parts (assembled at field) | | | | | |
| Components | Hood | For air discherge part x 1 | | For rear side air intake x 1 (Upper side x 1, lowe side x 1) | | For left side air intake x 1 | |
| | Fixing screw | 8 (M5x12 tapping screw) | | 10 (M5x14 tapping screw) | | 8 (M5x12 tapping screw) | |
| | Fixing screw (SUS) | 6 (M5x12 tapping screw) | 6 (M5x14) | 24 (M5x12 tapping screw) | 24 (M5x14) | 14 (M5x12 tapping screw) | 14 (M5x14) |
| | | Installation manual | | | | | |
| Installation restriction | | Installation with “Guard net”, “Wind guard” or “Air flow guide” is not available | | Installation with “Guard net” is not available | | | |
| Safety wire rope for overturning prevention (optional parts) | | ASG-SW20A | | | | | |



Все каталоги и инструкции здесь: https://splitsystema48.ru/instrukcii-po-ekspluatacii-kondicionerov.html

# 1.2. ACCESSORIES INSTALLATION

## 1.2.1. Pump kit

**NOTE**

- *Minimum inlet pressure at the pump suction side in order to prevent cavitation noises at an ambient temperature of +40ºC and a water temperature of Tmax:*

| Tmax | Minimum inlet pressure |
|---|---|
| +50ºC | 0.05 bar |
| +95ºC | 0.5 bar |

- *These values are valid up to 300m above sea level. For higher elevations add 0.01 bar/100m additional height.*

Components supplied:
- Complete pump.
- Two-part heat insulation (for single pump only).
- 2 seals (for threaded connections only).

Installation guidelines:
- Installation should only take place once all welding and soldering work has been completed and the pipe network has been rinsed. Dirt can have an adverse effect on the functioning of the pump.
- The flow direction of the pump must correspond to the directional arrow on the pump housing.

**CAUTION**

- *Crash damage. Risk of damage to the O-ring. When turning the motor housing round, ensure the O-ring between the can pot and the pump housing does not become damaged. The O-ring must not be turned and must remain at the edge of the can pot pointing towards the impeller.*
- *Damage by water. Risk of build-up of condensation water. For units that require insulation and for which the standard insulation provided cannot be used, only the pump housing may be insulated. The condensation water openings on the motor flange must be left open.*

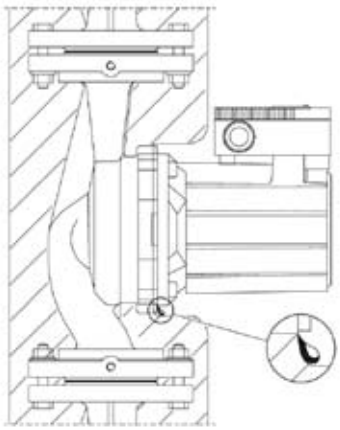

Lateral view of a generic pump

**CAUTION**

- *Untrained personnel. General malfunction and other damages. Assembly and installation should only be carried out by qualified personnel.*
- *Contamination. Risk of poisoning.The pumps must not be used for drinking water or foodstuffs.*



Все каталоги и инструкции здесь: https://splitsystema48.ru/instrukcii-po-ekspluatacii-kondicionerov.html

## 1.2.2. WEH - Water Electric Heater

### Name of parts

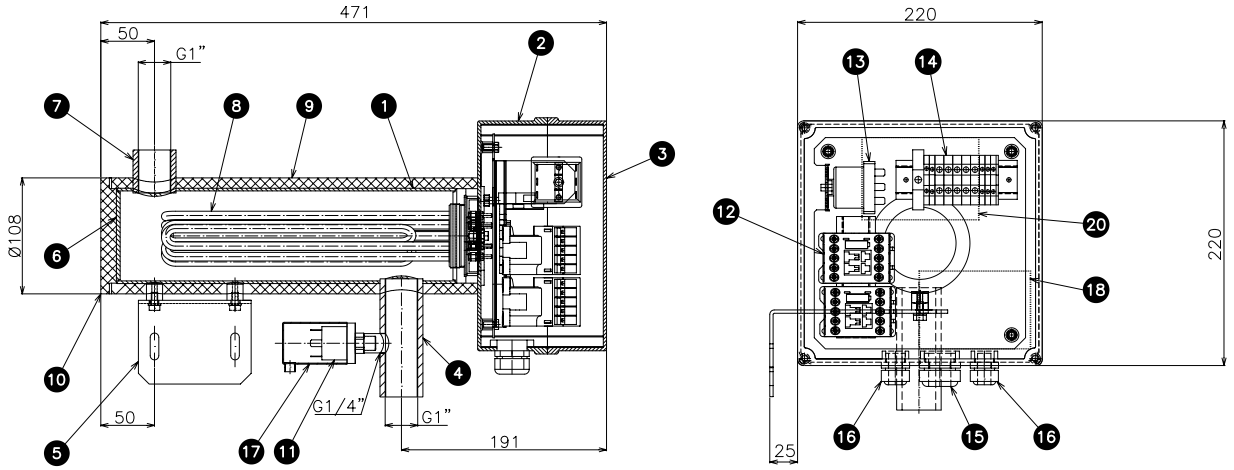


| Ref. | Qty. | Name | Ref. | Qty. | Name |
|---|---|---|---|---|---|
| ❶ | 1 | Tank body | ⓫ | 1 | PSW |
| ❷ | 1 | Front E-casing | ⓬ | 2 | 3-pole contactor |
| ❸ | 1 | Back E-casing | ⓭ | 1 | Thermostat |
| ❹ | 1 | Tank in-connection | ⓮ | 1 | Terminal board |
| ❺ | 1 | Wall support | ⓯ | 1 | Packing gland |
| ❻ | 1 | Tank front cover | ⓰ | 2 | Packing gland |
| ❼ | 1 | Tank out-connection | ⓱ | 1 | PSW protector |
| ❽ | 1 | Resistance | ⓲ | 1 | Caution label |
| ❾ | 1 | Tank body insulation | ⓳ | 1 | Indication poster |
| ❿ | 1 | Tank body insulation | ⓴ | 1 | Wiring label |

### Unit installation

Transport the products as close as possible to the installation location before unpacking.
Check the contents of the package:

- WEH-6E
- Installation and Operation Manual
- (2) M6x15 screw and (2) M6 washers
- Wall fixing support

### Selection procedure for YUTAKI units

| | NOTE |
|---|---|

- *WEH appliance must be installed in an indoor place.*
- *WEH installation must be done by professional installers.*
- *Install the WEH with sufficient clearance around it for operation and maintenance as shown in the following figures.*
- *Install the WEH where good ventilation is available. Do not install the WEH where there is a high level of oil mist, salty air or sulphurous atmosphere.*
- *When installing some device next to WEH, keep clearance between WEH and any other obstacle of more than 500mm.*



Все каталоги и инструкции здесь: https://splitsystema48.ru/instrukcii-po-ekspluatacii-kondicionerov.html

| | CAUTION |
|---|---|
| | - *Insufficient ventilation. Can cause oxygen deficiency.*<br>  - *Working with insufficient ventilation, in an enclosed space, can produce toxic gas, especially when cleaning agent is heated to high temperature by, e.g., being exposed to fire.*<br>  - *Do not install WEH near any flammable substance.* |

**Place provision**

1

Drill 2 holes Ø 8mm on the wall for fixing WEH according to the dimensions of the Wall Support attached.

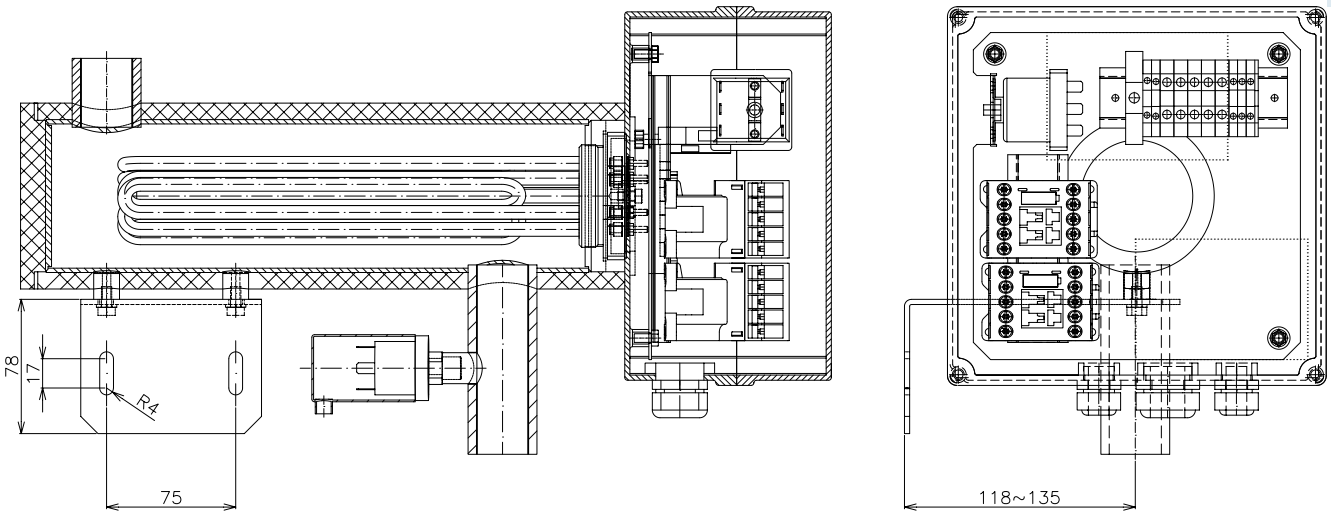


- Fixed supplied support to the wall by using previous drill holes.
- Use attached screws for fixing WEH to the supplied support.
- Check that WEH are installed horizontally.
- For cleaning, use non flammable and non toxic cleaning liquid. The use of flammable agents should cause explosion or fire.
- Cleaning liquid shall be collected after cleaning.
- Pay attention do not trapp cables when closing the electrical box cover. It could cause a electric shock.



Все каталоги и инструкции здесь: https://splitsystema48.ru/instrukcii-po-ekspluatacii-kondicionerov.html

## 1.2.3. DHWT - Domestic Hot Water Tank

**Name of parts**

DHWT (200/300)S-2.5H1E

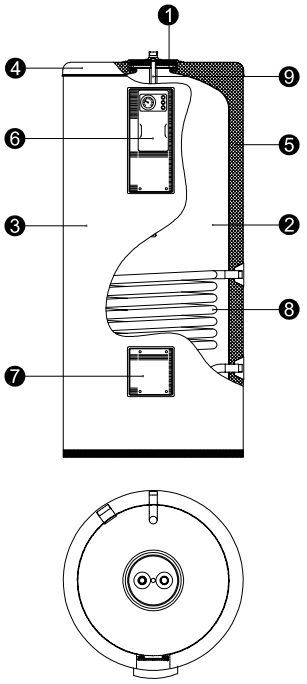

| Ref. | Qty. | Name |
|---|---|---|
| ❶ | 1 | Inspection aperture |
| ❷ | 1 | HSW storage tank |
| ❸ | 1 | External covering |
| ❹ | 1 | Top cover |
| ❺ | 1 | Thermal insulation |
| ❻ | 1 | Control panel |
| ❼ | 1 | Electrical Heater |
| ❽ | 1 | Heating coil |
| ❾ | 1 | Sensor probe |

DHWT (200/300)E-2.5H1E

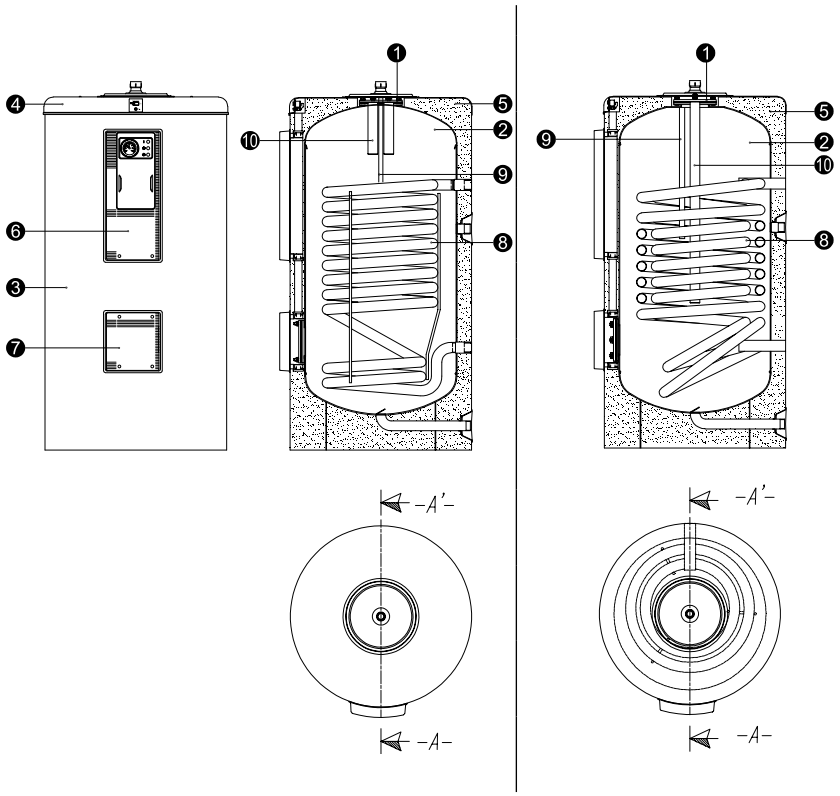


| Ref. | Qty. | Name |
|---|---|---|
| ❶ | 1 | Inspection aperture |
| ❷ | 1 | HSW storage tank |
| ❸ | 1 | External covering |
| ❹ | 1 | Top cover |
| ❺ | 1 | Thermal insulation |
| ❻ | 1 | Control panel |
| ❼ | 1 | Electrical Heater |
| ❽ | 1 | Heating coil |
| ❾ | 1 | Sensor probe |
| ❿ | 1 | Cathodic protection (anode) |



Все каталоги и инструкции здесь: https://splitsystema48.ru/instrukcii-po-ekspluatacii-kondicionerov.html

**Unit installation**

Transport the products as close as possible to the installation location before unpacking.

Check the contents of the package:

- DHWT Model
- Installation and Operation Manual & Documents

**Selection procedure for DHWT units**

| | NOTE |
|---|---|
| | - *WEH appliance must be installed in an indoor place.*<br>- *WEH installation must be done by professional installers.*<br>- *Install the WEH with sufficient clearance around it for operation and maintenance as shown in the following figures.*<br>- *Install the WEH where good ventilation is available. Do not install the WEH where there is a high level of oil mist, salty air or sulphurous atmosphere.*<br>- *When installing some device next to WEH, keep clearance between WEH and any other obstacle of more than 500mm.* |

| | CAUTION |
|---|---|
| | - *Insufficient ventilation. Can cause oxygen deficiency.*<br>  - *Working with insufficient ventilation, in an enclosed space, can produce toxic gas, especially when cleaning agent is heated to high temperature by, e.g., being exposed to fire.*<br>  - *Do not install WEH near any flammable substance.* |

**Working space**

- Check that DHWT are installed vertically .
- For cleaning, use no flammable and no toxic cleaning liquid. The use of flammable agents should cause explosion or fire.
- Cleaning liquid shall be collected after cleaning.
- Pay attention do not trap cables when closing the electrical box cover. It could cause a electric shock.



Все каталоги и инструкции здесь: https://splitsystema48.ru/instrukcii-po-ekspluatacii-kondicionerov.html

**Все каталоги и инструкции здесь:** https://splitsystema48.ru/instrukcii-po-ekspluatacii-kondicionerov.html

# 2. WATER PIPE INSTALLATION

This chapter provides information about the procedures to perform water piping work connections for Yutaki units.

## CONTENTS

2.1 General notes ..... 34

2.2. Piping work connection considerations ..... 35

2.2.1. Minimum water volume description ..... 35
2.2.2. Correction factor due to use of glycol ..... 37

2.3. Water control ..... 37

2.4. Water check valve ..... 38

2.5. Accessories hydraulic installation ..... 39

2.5.1. Pump kit ..... 39
2.5.2. WEH- Water Electric Heater ..... 40
2.5.3. DHWT- Domestic Hot Water Tank ..... 42
2.5.4. Water drain discharge connection ..... 44





Все каталоги и инструкции здесь: https://splitsystema48.ru/instrukcii-po-ekspluatacii-kondicionerov.html

## 2.1 GENERAL NOTES

1. Connect all pipes as close as possible to the unit, so that disconnection can be easily performed when required.

2. It is recommended to use flexible joints for the piping of water inlet and outlet, so vibration will not be transmited.

3. Whenever possible, sluice valves should be installed for water piping, in order to minimise flow resistance and to maintain sufficient water flow.

4. Proper leak inspection should be performed to check for leaking parts inside and outside the system, by completely opening the hot water inlet and outlet valves to the water condenser. Additionally, install equip valves to the inlet and outlet piping.

5. This unit is equipped with an air purge at the highest position of the water system. If this position is not the highest one within the whole water installation, equip another air purge.

   Also, equip a drain cock on the outlet piping. The cock handle should be removed so that the cock can not be opened under normal circumstances. If this cock is opened during operation, trouble will occur due to water blow-off.

6. When necessary, put insulation on the pipes in order to avoid heat losses.

7. When the unit is stopped during shutdown periods and the ambient temperature is very low, it is possible that the water in the pipes and in the circulating pump freeze, thus damaging the pipes and the water pump.
   In order to prevent this, during shutdown periods it is useful to empty the water from the installation.

| | ***NOTE*** |
|---|---|
| - | *In that case, open the unit by removing the service cover and unscrew the water inlet thermistor in order to drain the water of the circuit (as shown below)* |

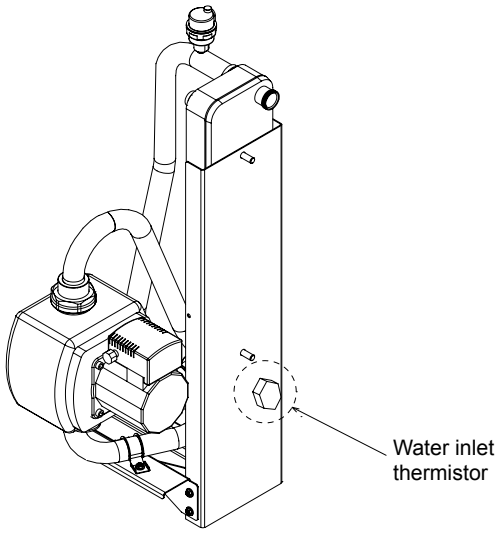


Otherwise, it is recommended to maintain the power supply to the installation, since an electric cord could prevent the freezing of the water contained in the circuit.
Additionally, in cases where water drainage is difficult, an antifreeze mixture of glycol (ethylene or propylene) should be used (content between 10 % and 40 %).
The performance of the unit working with glycol may decrease in proportion to the percentage of glycol used, since the density of glycol is higher than that of water. (For more information, see chapter 4 of Technical Catalogue).



Все каталоги и инструкции здесь: https://splitsystema48.ru/instrukcii-po-ekspluatacii-kondicionerov.html

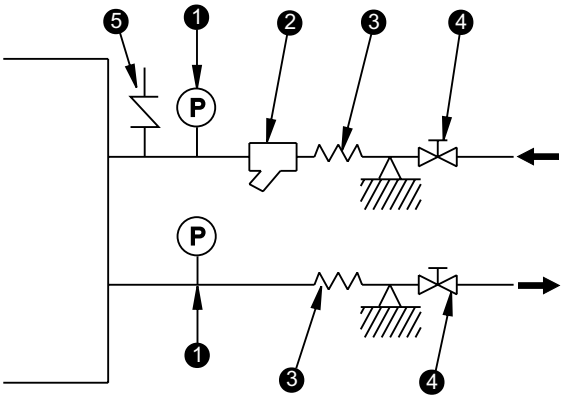


1. Pressure gauge
2. Strainer
3. Flexible joint
4. Valve
5. Check valve

| CAUTION |
|---|
| - *Malfunction. Damage by clogging.*<br>  - *This product is equipped with plate heat exchanger type. In the heat exchanger, water flows through a narrow space between the plates. Therefore, there is a possibility that freezing may occur if foreign particles or dust are clogged. In order to avoid this clogging, mesh water strainer shall be installed in the water inlet pipe and as close as possible to the plate heat exchanger. In case of punching metal type strainer, mesh hole size shall be Ø 1.5mm or less.*<br>  - *Never use the salt type antifreeze mixture, since it possesses strong corrosion characteristics, and water equipment might be damaged.*<br>  - *When connecting several units to a common pipe, its design should ensure that the water flow on each unit is the same (see below figure). Imbalance of water distribution may cause a serious damage like water freezing in the plate heat exchanger.* |



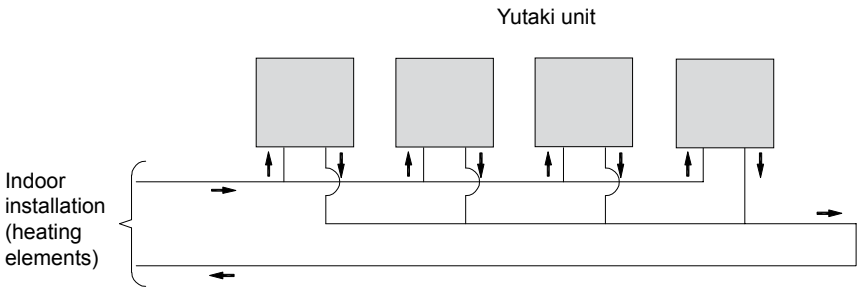


| Working condition | |
|---|---|
| Pressure range | 0 MPa ~ 1.0 MPa |
| Water temp. range | - 20ºC ~ 90ºC |
| Pressure range of water main | 0.17~ 0.2 MPa |

# 2.2. PIPING WORK CONNECTION CONSIDERATIONS

## 2.2.1. Minimum water volume description

- **Necessity of water in system and summary of its calculation**

The following problems may occur when the quantity of water in the forced circulation system(1) on water side is insufficient.

- Compressor in operation repeats numerous "start/stop" when light-loaded, which may result in shorter life or failure.

- Low temperature in water circulation during defrost operation, which may cause an alarm (freeze protection) at the stop of the unit.



Все каталоги и инструкции здесь: https://splitsystema48.ru/instrukcii-po-ekspluatacii-kondicionerov.html

| | NOTE |
|---|---|
| - | *(1) The shaded part of the pipe system below. (Excluding the expansion tank (cistern))* |

Calculate and ensure that the water volume in the system is equal or greater than the larger value obtained from:

1. Protective water volume for product

2. Minimum water volume for temperature drop during defrost operation

When the minimum water volume can not be ensured, use a Buffer tank to compensate the shortage (<0) of water (2). See figure below.

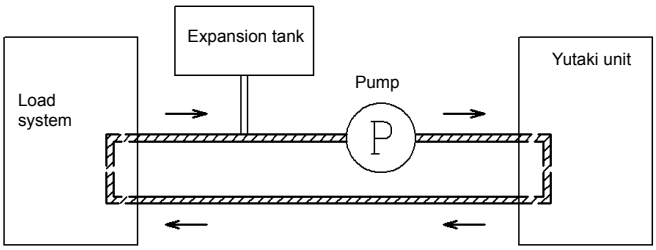


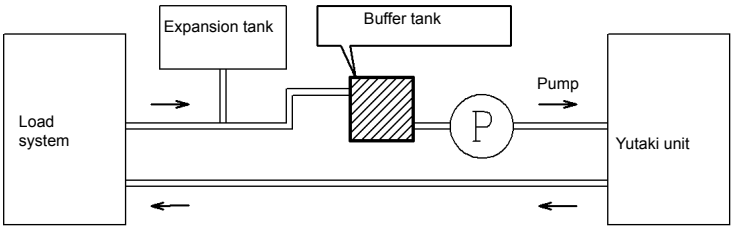


| | NOTE |
|---|---|
| - | *(2) Shortage = Minimum water volume – Water volume in circulation system* |

The following part shows the minimum water volume in the system for product protection and temperature drop during defrost operation.

1. **Protective water volume for product**

Ensure that the water volume is equal or greater than those shown below, in order to reduce ON/OFF frequency of the unit at no load or extreme light load. When water volume is less than the volume indicated (minimum water volume), compressor operation frequently stops at light load, which may result in shorter life or failure.

| Model / ON/OFF Temp. differential | RHUE-3AVHN | RHUE-4AVHN | RHUE-5A(V)HN | RHUE-6A(V)HN |
|---|---|---|---|---|
| 4ºC | 28 | 38 | 46 | 56 |
| 3ºC | 36 | 48 | 58 | 70 |
| 2ºC | 50 | 65 | 80 | 96 |
| 1ºC | 80 | 107 | 130 | 156 |
| | | | | (Units are in ltrs.) |



Все каталоги и инструкции здесь: https://splitsystema48.ru/instrukcii-po-ekspluatacii-kondicionerov.html

| NOTE |
|---|
| - *The factory default ON/OFF temperature differential is "4 °C". Note that the minimum water volume varies for different setting for each purpose as shown in the table above.* |

2. **Minimum required water volume during defrosting**

The following table shows the minimum water volume needed in each YUTAKI unit in case of a permitted drop in temperature of 10ºC.

| Model / Water temperature drop | RHUE-3AVHN | RHUE-4AVHN | RHUE-5A(V)HN | RHUE-6A(V)HN |
|---|---|---|---|---|
| 5ºC | 212 | 276 | 342 | 410 |
| 10ºC | 106 | 138 | 171 | 205 |
| 15ºC | 71 | 92 | 114 | 137 |
| 20ºC | 53 | 69 | 86 | 103 |
| 25ºC | 42 | 55 | 68 | 82 |
| | | | | (Units are in ltrs.) |

| NOTE |
|---|
| - *The values shown on the table are based on theoretical installation conditions, and therefore, it rests with the client to recalculate these values depending on the real conditions of the installation.* |

### 2.2.2. Correction factor due to use of glycol

When the ambient temperature is low in winter, it is possible that the unit will be damaged by freezing water in the pipes and in the circulating pump during the shutdown periods.

In order to prevent this, it is useful to empty the water from the installation or to maintain the supply to the installation, as an electric cord can prevent the water from freezing in the circuit.

Additionally, in cases where water drainage is difficult, an antifreeze mixture of ethylene glycol or propylene should be used (Between 10 % and 40 %).

The performance of the unit when working with glycol may decrease in proportion to the percentage of glycol used, as the density of glycol is higher than that of water. (For more information, see TCGB0066)

## 2.3. WATER CONTROL

| CAUTION |
|---|
| - *Malfunction. Damage by poor quality water. Industrial water rarely causes deposits of scales or other foreign substances on equipment and the most vulnerable components are plate heat exchangers. However, well water or river water may in most cases contain suspended solid matter, organic matter, and scales in great quantities. Therefore, such water should be subjected to filtration or softening treatment with chemicals before its use as heat transporter in Yutaki unit.* |





Все каталоги и инструкции здесь: https://splitsystema48.ru/instrukcii-po-ekspluatacii-kondicionerov.html

The following table shows the reference values fo the most important parameters concerning the quality of the water:

| Item | Water System | | Tendency | |
|---|---|---|---|---|
| | Circulating Water (20 C Less than) | Supply Water | Corrosion | Deposits of scales |
| Standard quality pH (25 °C) | 6.8 ~ 8.0 | 6.8 ~ 8.0 | ● | ● |
| Electrical conductivity (mS/m) (25°C) {μS/cm} (25 °C) (2) | Less than 40<br>Less than 400 | Less than 30<br>Less than 300 | ● | ● |
| Chlorine Ion (mg $Cl^-$/l) | Less than 50 | Less than 50 | ● | |
| Sulphur acid Ion (mg $SO42^-$/l) | Less than 50 | Less than 50 | ● | |
| The amount of acid consumption (pH 4.8) (mg CaCO3/l) | Less than 50 | Less than 50 | | ● |
| Total hardness (mg CaCO3 /l) | Less than 70 | Less than 70 | | ● |
| Calcium hardness (mg CaCO3 /l) | Less than 50 | Less than 50 | | ● |
| Silica L (mg SIO2 /l) | Less than 30 | Less than 30 | | ● |
| Reference quality total iron (mg Fe/l) | Less than 1.0 | Less than 0.3 | ● | ● |
| Total copper (mg Cu/l) | Less than 1.0 | Less than 0.1 | ● | |
| Sulphur ion (mg $S2^-$/l) | It shall not be detected. | | ● | |
| Ammonium ion (mg NH4+/l) | Less than 1.0 | Less than 0.1 | ● | |
| Remaining chlorine (mg Cl/l) | Less than 0.3 | Less than 0.3 | ● | |
| Floating carbonic acid (mg CO2/l) | Less than 4.0 | Less than 4.0 | ● | |
| Index of stability | 6.8 ~ 8.0 | - | ● | ● |

***NOTE***

- *The mark "●" in the table means the factor concerned with the tendency of corrosion or deposits of scales.*
- *The value showed in "{}" are for reference only according to the former unit.*
- *As the the well water should not fulfil the above limits, the use of industrial water or other water sources should be considered.*

## 2.4. WATER CHECK VALVE

Attached to the unit there is a water check valve (non return valve). This component is a safety device to protect the system against back pressure, back flow and back syphonage of non-potable water into service pipe, plants and equipments.

This valve shall be installed at site.

Main Characteristics:
Maximum working pressure: 16bar
Maximum working temperature: 70ºC (short term 90ºC)
Threaded connection R1/2"
Available test and drain plugs 1/4"
Length: 137mm
Kvs value: 6
Weight: 0.24kg

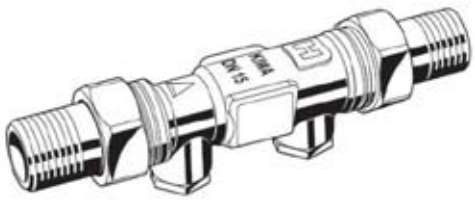



Все каталоги и инструкции здесь: https://splitsystema48.ru/instrukcii-po-ekspluatacii-kondicionerov.html

Installation guidelines:

1. Note flow direction (indicated by arrow) when installing the check valve.
2. In a drinking water supply the check valves are fitted immediately after water meter. This position ensures optimum protection for the drinking water supply.
3. Install in horizontal pipework with test plugs directed downwards. This position ensures optimum protection efficiency and is the best for testing the valve.
4. Shutt off valves should be fitted on each side of the check valve for easier and faster valve testing.
5. The installation location should be protected against frost and be easily accessible.



## 2.5. ACCESSORIES HYDRAULIC INSTALLATION

### 2.5.1. Pump kit

◆ **Pump kit assembly**

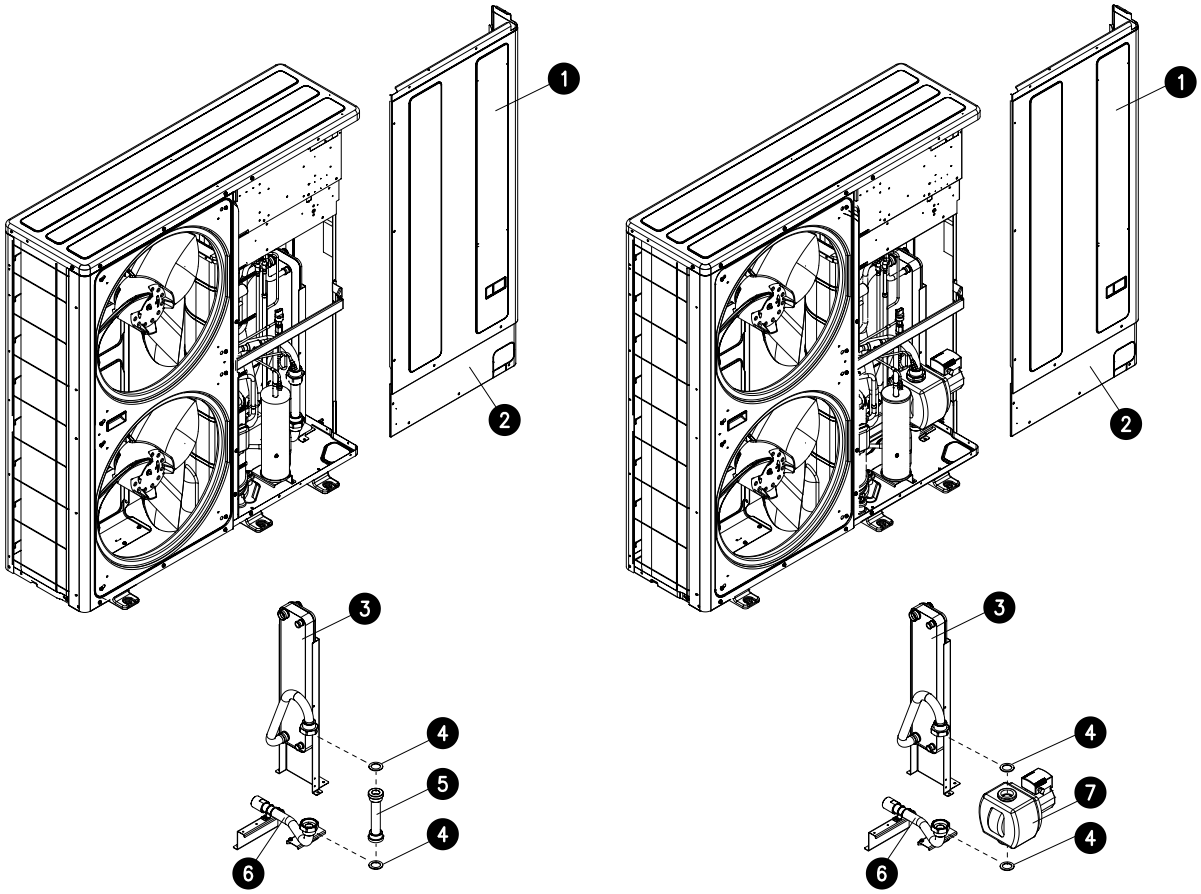


| Ref. | Name | Ref. | Name |
|---|---|---|---|
| ❶ | Service Cover 1 | ❹ | Packing (Qty. 2) |
| ❷ | Service Cover 2 | ❺ | Water pipe 1 |
| ❸ | Plate Heat Exchanger Assembly | ❻ | Water pipe 2 Assembly |
| | | ❼ | Water Pump |



Все каталоги и инструкции здесь: https://splitsystema48.ru/instrukcii-po-ekspluatacii-kondicionerov.html

- Remove service cover 1 (item 1) and service cover 2 (item 2).
- Unscrew the nut of the plate heat exchanger assembly (item 3) and the nut of the water pipe 2 assembly (item 6) in order to disassemble water pipe1 (item 5) from the Yutaki unit.
- Separate the packings (item 4) to make possible to remove the water pipe1 (item 5).
- Put the packings and connect the water pump (item 7) to the Yutaki unit and screw again the nut of the plate heat exchanger assembly (item 3) and the nut of the water pipe 2 assembly (item 6).
- Connect the pump wiring from the electrical box to the pump according to the detail.
- Assemble the service cover 2 (item 2) and service cover 1 (item 1) to finish the installation.

### ◆ Installation out of the Yutaki unit

Additionally, when the pump is installed out of the Yutaki unit, the installation must be in accordance with the following guidelines:

- The pump must be installed in an easily accesible place to facilitate inspection and replacement.
- Assemble the pump such that water can not drip into the pump motor or terminal box.
- Carry out stress- free installation with the pump motor shift in horizontal plane (see installation position in the next figure):

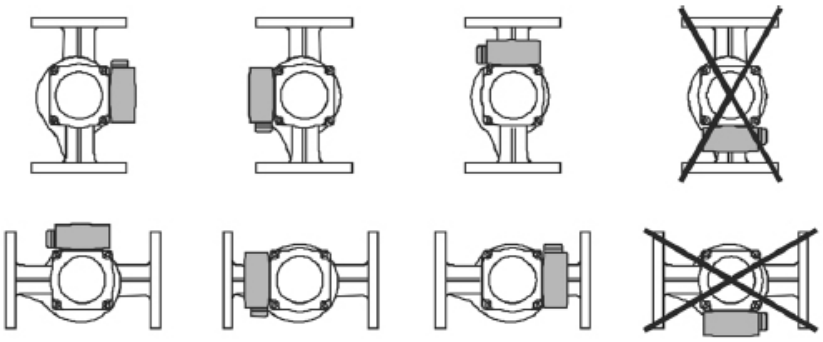

- The motor terminal box must not point downwards (see admissible installation position in previous figure). It may be necessary to turn the motor hoosing round after loosening the hexagon socket screws.

## 2.5.2. WEH- Water Electric Heater

### ◆ Hydraulic circuit

**General notes**

When Piping connections are performed:

1. Connect all pipes as close as possible to the unit, so that disconnection can be easily performed when required.
2. It is recommended to use flexible joints for the piping of water inlet and outlet, so vibration will not be transmitted.
3. Whenever possible, sluice valves should be installed for water piping, in order to minimise flow resistance and to maintain sufficient water flow.
4. It is recommended to apply ball valves in both water pipe connections to make easier any maintenance work.
5. Proper inspection should be performed to check for leaking parts inside and outside the system, by completely opening the hot water inlet and outlet valves to the water condenser.
6. This WEH must be fully air purged to avoid heating elements radiating the tank case without water.
   Install WEH as shows on the following drawing in order to allow a natural purge on the WEH (inlet pipe in the bottom side, and outlet pipe in the upper side, both vertically oriented).
   It is recommended to install an air purge after outlet piping in the highest position of the hydraulic installation.
   Previous recommendation is a must when there are other parts of hydraulic system that could be installed in a higher position than WEH.
7. Apply thermal insulation on the hydraulic system pipes in order to avoid accidental injure due to excessive heat on piping surfaces and also to avoid heat losses.
8. When the unit is stopped during shutdown periods and the ambient temperature is very low, it is possible that the water in the pipes and in the circulating pump freeze, thus damaging the pipes and the water pump.



Все каталоги и инструкции здесь: https://splitsystema48.ru/instrukcii-po-ekspluatacii-kondicionerov.html

In order to prevent this, during shutdown periods it is useful to empty the water from the installation.

| | NOTE |
|---|---|
| | - *In cases where water drainage is difficult, an antifreeze mixture of glycol (ethylene or propylene) should be used (content between 10 % and 40 %).*<br>- *The performance of the unit working with glycol may decrease in proportion to the percentage of glycol used, since the density of glycol is higher than that of water.* |

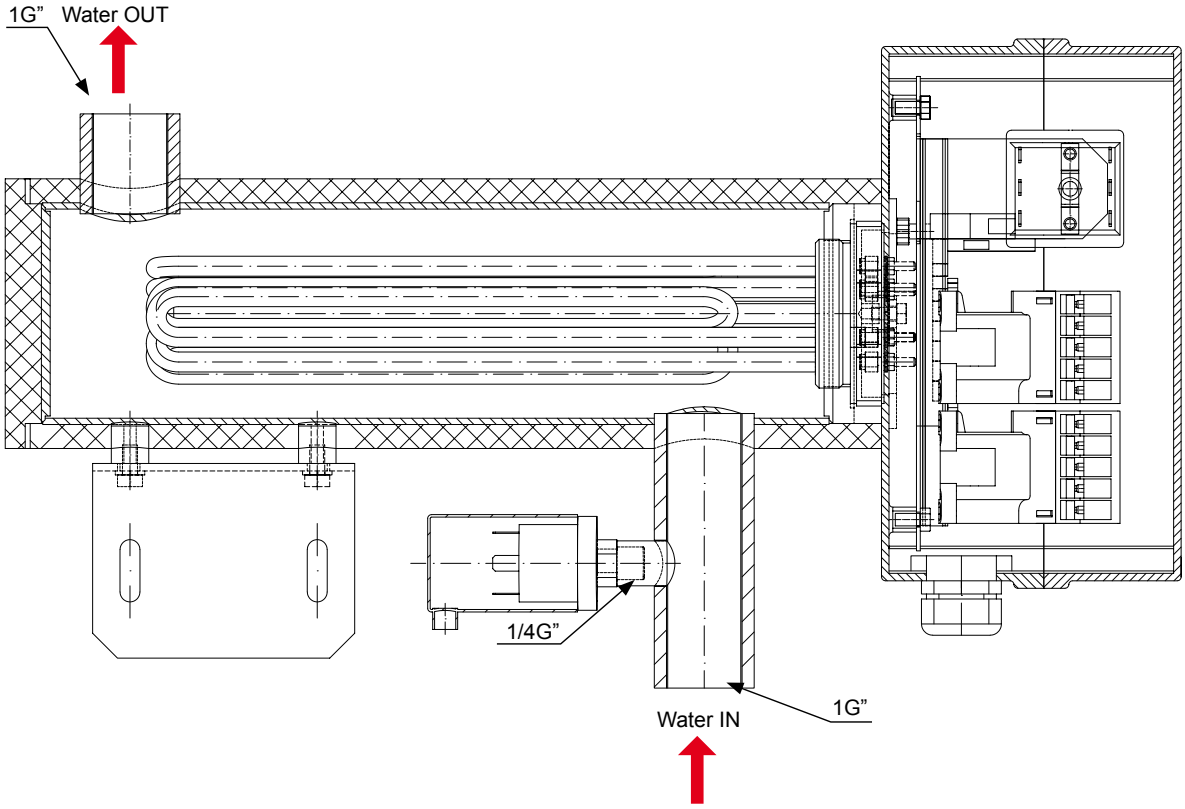


- Inlet and outlet connection pipes must be 1G”
- It must be kept the water flow direction indicated in previous drawing

| | NOTE |
|---|---|
| | - *Check periodically:*<br>  - *Water flow and pressure*<br>  - *Water leakages*<br>  - *Fixing points tightening* |

**Minimum water volume description**

- **Necessity of water in system:**
  The following problems should occur when the quantity of water in the forced circulation system (1) on water side is insufficient.

  1. WEH frequently ON/OFF cycles affecting Yutaki performance.
  2. Low temperature in water circulation system at defrosting, which should cause an alarm (freeze protection).
  3. LWPS or Cut-Out thermostat activation due to low water pressure (< 1 bar) or due to excessive high water temperature inside WEH.



Все каталоги и инструкции здесь: https://splitsystema48.ru/instrukcii-po-ekspluatacii-kondicionerov.html

| | NOTE |
|---|---|
| - *Calculate and ensure that the water volume in the system is enough (see Yutaki product manual for recommendations).* | |

**Water control**

| | CAUTION |
|---|---|
| - *Malfunction. Damage by poor quality water.*<br>  - *When it is used industrial water inside hydraulic system, it rarely causes deposits of scales or other foreign substances on the equipment. However, well water or river water should in most cases contain suspended solid matter, organic matter, and scales in great quantities. Therefore, such water should be subjected to filtration or to a softening treatment with chemicals before application as chilled water.*<br>  - *It is also necessary to analyse the quality of water by checking pH, electrical conductivity, ammonia ion content, sulphur content, and others. Should the results of the analysis be not good, the use of industrial water would be recommended.* | |

## 2.5.3. DHWT- Domestic Hot Water Tank

- **Hydraulic circuit**

When Piping connections are performed:

1. Connect all pipes as close as possible to the unit, so that disconnection can be easily performed when required.
2. It is recommended to use flexible joints for the piping of water inlet and outlet, so vibration will not be transmitted.
3. Whenever possible, sluice valves should be installed for water piping, in order to minimise flow resistance and to maintain sufficient water flow.
4. It is recommended to apply ball valves in both water pipe connections to make easier any maintenance work.
5. Proper inspection should be performed to check for leaking parts inside and outside the system, by completely opening the hot water inlet and outlet valves to the water condenser.
6. This DHWT must be fully air purged to avoid heating elements radiating the tank case without water.
7. Apply thermal insulation on the hydraulic system pipes in order to avoid accidental injure due to excessive heat on piping surfaces and also to avoid heat losses.
8. When the unit is stopped during shutdown periods and the ambient temperature is very low, it is possible that the water in the pipes and in the circulating pump freeze, thus damaging the pipes and the water pump. In order to prevent this, during shutdown periods it is useful to empty the water from the installation.

| | NOTE |
|---|---|
| - *Check periodically:*<br>  - *Water flow and pressure*<br>  - *Water leakage's*<br>  - *Fixing points tightening*<br>  - *Inlet and outlet connection pipes must be 1G"* | |



Все каталоги и инструкции здесь: https://splitsystema48.ru/instrukcii-po-ekspluatacii-kondicionerov.html

**DHWT(200/300)(E/S)-2.5H1E**

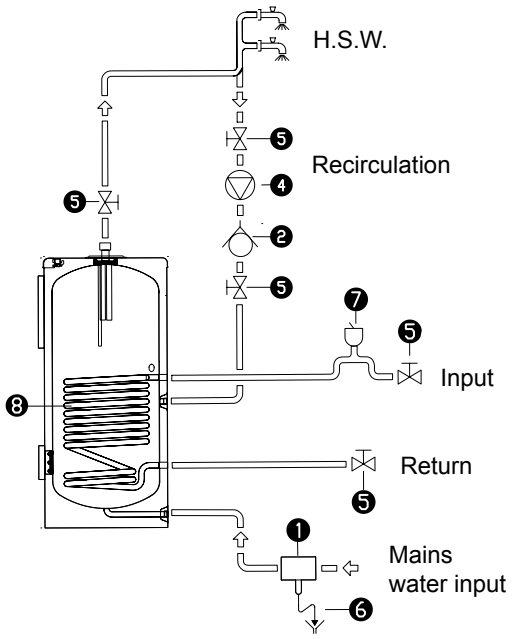


| Ref. | Name |
|---|---|
| 1 | Sanitary safety valve unit |
| 2 | Non-return valve |
| 3 | Circulator |
| 4 | Recirculation pump |
| 5 | Shutoff cock |
| 6 | Drain |
| 7 | Drain valve |
| 8 | Heating coil |

2

- **Pressure drop**

DHWT(200/300)E-2.5H1E

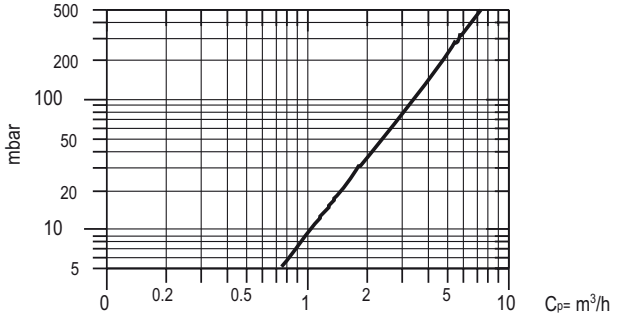


DHWT(200/300)S-2.5H1E

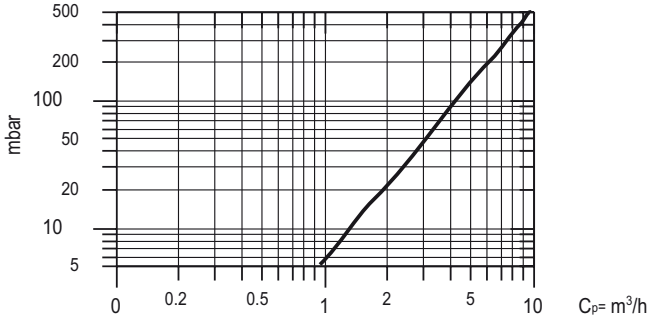


- **General standard for hydraulic installation**

- The safety valve unit will fitted at the sanitary water installation.
- A pressure reducer must be placed in the DHWT installation. The nominal pressure of the safety unit will be 8 bar.
- When the main pressure is more than 6 bar a pressure reducer should be installed.
- The water discharge during heating (expansion) is normal. The volume of this discharge can be up to 3% of the storage tank's capacity.
- The pressure regulator device must be working regularly , depending on the quality of water, in order to remove the lime's deposits and verify that it is not blockade.
- A water leakage in the pressure protection device can exist. The discharge pipe should be always open to the atmosphere, free of frost and in continuous slope to the down side.
- Dielectric bushes must be fitted at the input and output sanitary water and at the tank circuit connections.
- Emptying the DHWT: Close the main inlet water valve and open the relief valve of the security water group.



Все каталоги и инструкции здесь: https://splitsystema48.ru/instrukcii-po-ekspluatacii-kondicionerov.html

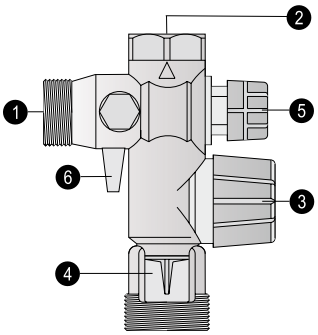


| Ref | Name |
|---|---|
| 1 | Main inlet water |
| 2 | DHWT inlet connection |
| 3 | Security valve and manual empty |
| 4 | Emptying connection |
| 5 | Check valve |
| 6 | Close valve |

## 2.5.4. Water drain discharge connection

- **Drain discharging boss**

When the base of the Yutaki is temporarily used as a drain receiver, the drain boss should be connected to the drain pipe. See the below figure for further details.

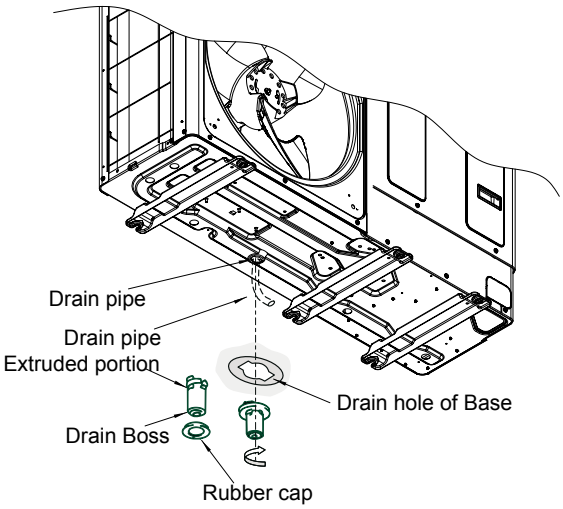


| Model | Applicable Model |
|---|---|
| DBS-26 | RHUE(3-6)A(V)HN |

- **Connection procedure**

1. Insert the rubber cap into the drain boss up to the extruded portions.
2. Insert the boss into the unit base and turn approximately 40 degree counterclockwise.
3. The outer diameter section of the drain boss is 32 mm.
4. A drain pipe should be field-supplied.

| | ***NOTE*** |
|---|---|
| | - *Do not use this drain boss set in a cold area, since the drain water may freeze.*<br>- *This drain boss may not be sufficient to collect drain water. In such a case, a bigger drain pan should be fieldsupplied and installed under the unit.* |



Все каталоги и инструкции здесь: https://splitsystema48.ru/instrukcii-po-ekspluatacii-kondicionerov.html

# 3. ELECTRICAL WIRING CONNECTIONS AND DIAGRAM

This chapter describes the procedures to carry out the electrical wiring connections for the Yutaki and its control system.

## CONTENTS

3.1. General check ..... 46

3.2. Electrical wiring connection ..... 47

3.2.1. Field minimum wire sizes for the power source ..... 48
3.2.2. Main switches and fuses ..... 49

3.3. Setting the DIP switches ..... 49

3.4. LED indication ..... 53

3.5. Accessories electrical installation ..... 54

3.5.1. Pump kit ..... 54
3.5.2. WEH- Water Electric Heater ..... 57
3.5.3. DHWT- Domestic Hot Water Tank ..... 59

3.6. Electrical wiring diagrams ..... 65

3.6.1. Electrical wiring diagram for models RHUE-(3~6)AVHN ..... 66
3.6.2. Electrical wiring diagram for RHUE-(5/6)AHN ..... 67





Все каталоги и инструкции здесь: https://splitsystema48.ru/instrukcii-po-ekspluatacii-kondicionerov.html

# 3.1. GENERAL CHECK

**DANGER**

- *Electrical hazard. Can cause serious injuries or death.*
  - *Do not connect or adjust any wiring or connections unless the main power switch is OFF.*
  - *Make sure that all the power sources are switched OFF.*
  - *Check that the earth wire is securely connected, tagged and locked in accordance with national and local codes.*
  - *Check and test to ensure that if there is more than one source of power supply, that all are turned OFF.*
  - *Check to ensure that the screws of the terminal block are tightly tightened.*
- *Crash hazard. Can cause serious injuries.*
  - *Check to ensure that Yutaki fans are stopped before electrical wiring work or periodical check is performed.*

**CAUTION**

- *Damage to wires. Risk of fire.*
  - *Protect the wires, drain pipe and electrical parts from water, rats or other small animals. If not protected, rats may damage unprotected parts.*
  - *Wrap the accessory packing around the wires, and plug the wiring connection hole with the seal material to protect the product from any condensed water and insects.*
  - *Tightly secure the wires with the cord clamp inside the unit.*
  - *Lead the wires through the knockout hole in the side cover when using conduit.*
  - *Secure the cable of the remote control switch with the cord clamp inside the electrical box.*
  - *Electrical wiring must comply with national and local codes. Contact your local authority in regards to standards, rules, regulations, etc.*
  - *Check that the ground wire is securely connected.*
- *Electrical hazard. Risk of fire.*
  - *Connect a fuse of specified capacity.*
  - *Do not pass cables through the ventilation hole.*

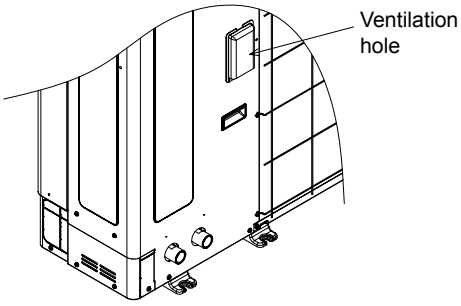


Make sure that the field-supplied electrical components (main power switches, circuit breakers, wires, connectors and wire terminals) have been properly selected according to the electrical data indicated. Make sure that they comply with national and regional electrical codes.

Following the Council Directive 2004/108/EC(89/336/EEC), relating to electromagnetic compatibility, next table indicates the maximum permissible system impedance Zmax at the interface point of the user's supply, in accordance with EN61000-3-11.

| MODEL | Zmax (Ω) |
|---|---|
| RHUE-3AVHN | 0,41 |
| RHUE-4AVHN | 0,41 |
| RHUE-5AVHN | 0,29 |
| RHUE-6AVHN | 0,29 |
| RHUE-5AHN | - |
| RHUE-6AHN | - |



Все каталоги и инструкции здесь: https://splitsystema48.ru/instrukcii-po-ekspluatacii-kondicionerov.html

Harmonics situation of each model regarding IEC 61000-3-2 and IEC 61000-3-12 is as follows:

| MODELS SITUATION REGARDING IEC 61000-3-2 AND IEC 61000-3-12 Ssc "xx" | MODELS | Ssc "xx" (kVA) |
|---|---|---|
| Equipment complying with IEC 61000-3-2 (Professional use) | RHUE-5AHN<br>RHUE-6AHN | - |
| Equipment complying with IEC 61000-3-12 | RHUE-3AVHN<br>RHUE-4AVHN<br>RHUE-5AVHN<br>RHUE-6AVHN | - |

Check that the power supply voltage is within +/-10 % of the rated voltage. And that power supply has an impedance low enough to avoid reducing the starting voltage more than 85% of the rated voltage.

## 3.2. ELECTRICAL WIRING CONNECTION

Power supply:
1~230V 50 Hz (3N~400V 50 Hz for RHUE-(5/6)AHN)

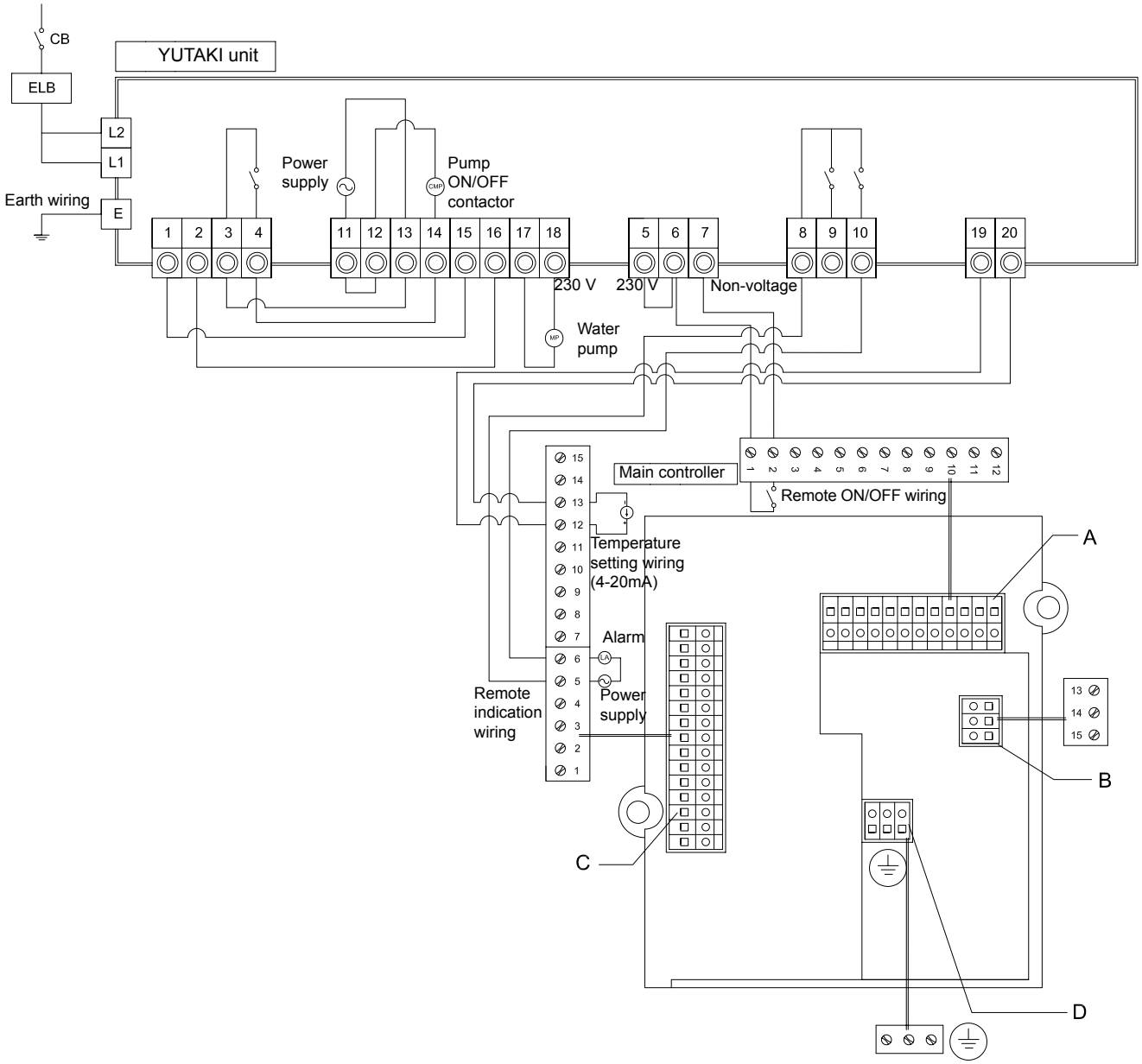




Все каталоги и инструкции здесь: https://splitsystema48.ru/instrukcii-po-ekspluatacii-kondicionerov.html

| | NOTE |
|---|---|
| - *The heater and the 3-way valve are accessories. (Their codes are EH61 and VID3V1 respectively).*<br>- *Refer to chapter "4" for more information.* | |

The correct electrical wiring connection for the unit is shown below.

1. Connect the three-phase power supply source wires L1, L2, L3 and N (for 400V 50Hz) to the terminal board in case of RHUE-(5/6)AHN unit, and L1 and N in case of RHUE-(3~6)AVHN units. Connect the ground wire to the plate in the electrical box.

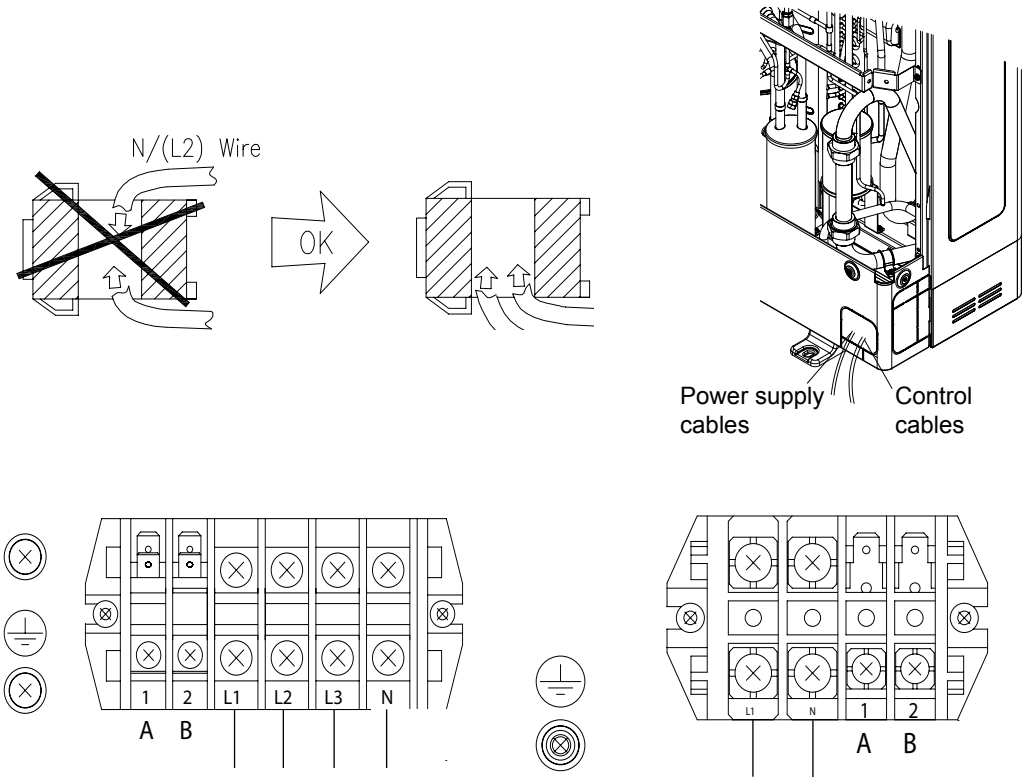


**RHUE-(5/6)AHN** **RHUE-(3~6)AVHN**

| | DANGER |
|---|---|
| - *Electrical hazard. Can cause serious injuries or death. Allways connect ground wires to the respective terminals or plates to avoid electrical hazard.* | |

## 3.2.1. Field minimum wire sizes for the power source

| Model | Power source | Max. current (A) | Power source cable size | Signal cable size |
|---|---|---|---|---|
| | | | EN60 335-1 ❶ | EN60 335-1 ❶ |
| RHUE-3AVHN | 1~ 230V 50Hz | 18 | 4.0 mm² | 0.75 mm² |
| RHUE-4AVHN | | 18 | 4.0 mm² | |
| RHUE-5AVHN | | 26 | 6.0 mm² | |
| RHUE-6AVHN | | 26 | 6.0 mm² | |
| RHUE-5AHN | 3N~ 400V 50Hz | 11 | 2.5 mm² | |
| RHUE-6AHN | | 11 | 2.5 mm² | |



Все каталоги и инструкции здесь: https://splitsystema48.ru/instrukcii-po-ekspluatacii-kondicionerov.html

### 3.2.2. Main switches and fuses

Select the main switches (current breaker) according to the next table:

| Model | Power source | CB (Circuit Break) (A) | ELB (Earth Leakage Breaker) (Number of poles/A/mA) |
|---|---|---|---|
| RHUE-3AVHN | 1~ 230V 50Hz | 32 | 2/40/30 |
| RHUE-4AVHN | | 32 | |
| RHUE-5AVHN | | 32 | |
| RHUE-6AVHN | | 32 | |
| RHUE-5AHN | 3N~ 400V 50Hz | 20 | 4/40/30 |
| RHUE-6AHN | | 20 | |

## 3.3. SETTING THE DIP SWITCHES

- **Number and position of DIP switches**
  The PCB of the Yutaki unit contains 9 DIP switches.
  DIP switches location on the PCB:

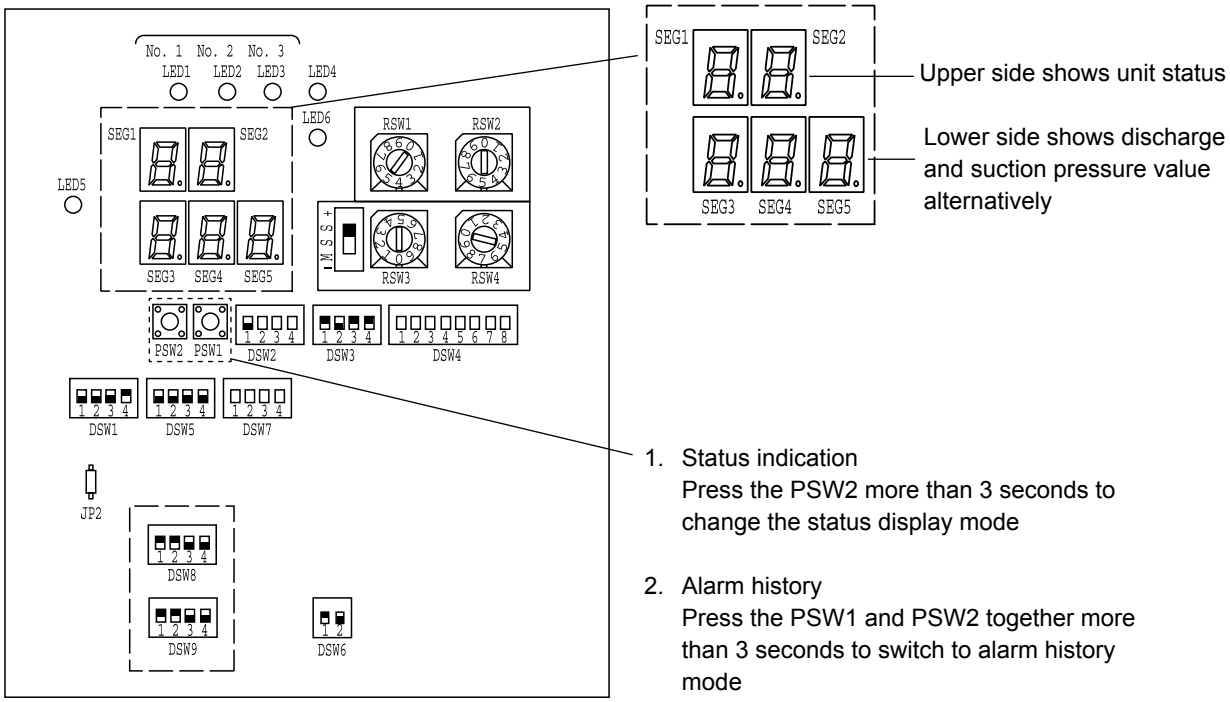


1. Status indication
   Press the PSW2 more than 3 seconds to change the status display mode
2. Alarm history
   Press the PSW1 and PSW2 together more than 3 seconds to switch to alarm history mode

| | NOTE |
|---|---|

- *The mark "■" indicates the position of dips switches.*
- *No mark "■" or "not available" indicates pin position is not affecting.*
- *The figures show the settings before shipment or after selection.*
- *"Not used" means that the pin must not be changed. A malfunction might happen if changed.*

| | NOTE |
|---|---|

- *Before setting dips switches, first turn the power source off. Otherwise, the changes will not be taken into account.*


Все каталоги и инструкции здесь: https://splitsystema48.ru/instrukcii-po-ekspluatacii-kondicionerov.html

- **DIP switch factory set for all units:**

| DSW | RHUE-3AVHN | RHUE-4AVHN | RHUE-5AVHN | RHUE-5AHN | RHUE-6AVHN | RHUE-6AHN |
|---|---|---|---|---|---|---|
| DSW1 | ON 1 2 3 4 | ON 1 2 3 4 | ON 1 2 3 4 | ON 1 2 3 4 | ON 1 2 3 4 | ON 1 2 3 4 |
| DSW2 | ON 1 2 3 4 | ON 1 2 3 4 | ON 1 2 3 4 | ON 1 2 3 4 | ON 1 2 3 4 | ON 1 2 3 4 |
| DSW3 | ON 1 2 3 4 | ON 1 2 3 4 | ON 1 2 3 4 | ON 1 2 3 4 | ON 1 2 3 4 | ON 1 2 3 4 |
| DSW4 | ON 1 2 3 4 5 6 7 8 | ON 1 2 3 4 5 6 7 8 | ON 1 2 3 4 5 6 7 8 | ON 1 2 3 4 5 6 7 8 | ON 1 2 3 4 5 6 7 8 | ON 1 2 3 4 5 6 7 8 |
| DSW5 | ON 1 2 3 4 | ON 1 2 3 4 | ON 1 2 3 4 | ON 1 2 3 4 | ON 1 2 3 4 | ON 1 2 3 4 |
| DSW6 | ON 1 2 | ON 1 2 | ON 1 2 | ON 1 2 | ON 1 2 | ON 1 2 |
| DSW7 | ON 1 2 3 4 | ON 1 2 3 4 | ON 1 2 3 4 | ON 1 2 3 4 | ON 1 2 3 4 | ON 1 2 3 4 |
| DSW8 | ON 1 2 3 4 | ON 1 2 3 4 | ON 1 2 3 4 | ON 1 2 3 4 | ON 1 2 3 4 | ON 1 2 3 4 |
| DSW9 | ON 1 2 3 4 | ON 1 2 3 4 | ON 1 2 3 4 | ON 1 2 3 4 | ON 1 2 3 4 | ON 1 2 3 4 |

- **Rotary switches**

| | |
|---|---|
| 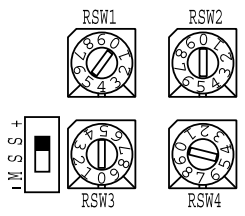  | RSW1 & RSW2: heating temperature setting |
| | RSW3 & RSW4 & SSW: not used |

- **DSW1: optional functions**

| Function | Set PINs |
|---|---|
| Factory setting | ON 1 2 3 4 |
| PCB self checking | ON 1 2 3 4 |
| Pump / High cut test | ON 1 2 3 4 |
| Optional functions setting mode | ON 1 2 3 4 |
| Compressor enable | ON 1 2 3 4 |



Все каталоги и инструкции здесь: https://splitsystema48.ru/instrukcii-po-ekspluatacii-kondicionerov.html

- **DSW2: unit control configuration / unit HP**

| Function | | Set PINs |
|---|---|---|
| Remote ON/OFF signal | Pulse signal commissioning | ON 1 2 3 4 |
| | Level signal (System controller) | ON 1 2 3 4 |
| PHEX flow direction | (Not used) | ON 1 2 3 4 |
| | Counter flow (Yutaki) | ON 1 2 3 4 |

| Function | Set PINs |
|---|---|
| 3HP unit | ON 1 2 3 4 |
| 4HP unit | ON 1 2 3 4 |
| 5 HP unit | ON 1 2 3 4 |
| 6 HP unit | ON 1 2 3 4 |

- **DSW3: unit control configuration**

| Function | Set PINs |
|---|---|
| Yutaki unit | ON 1 2 3 4 |
| Available low ambient for cooling mode (Not available) | ON 1 2 3 4 |
| Heating only (Not used) | ON 1 2 3 4 |
| Set temp by rotary switch (Commissioning) | ON 1 2 3 4 |
| Set temp by system controller (4 to 20 mA) | ON 1 2 3 4 |

- **DSW4: unit model confgurations**

| Function | Set PINs |
|---|---|
| (Not used) | ON 1 2 3 4 5 6 7 8 |
| (Not used) | ON 1 2 3 4 5 6 7 8 |
| Heat pump | ON 1 2 3 4 5 6 7 8 |
| Yutaki heat pump | ON 1 2 3 4 5 6 7 8 |
| (Not used) | ON 1 2 3 4 5 6 7 8 |
| (Not used) | ON 1 2 3 4 5 6 7 8 |
| (Not used) | ON 1 2 3 4 5 6 7 8 |
| (Not used) | ON 1 2 3 4 5 6 7 8 |

| Function | Set PINs |
|---|---|
| (Not used) | ON 1 2 3 4 5 6 7 8 |
| (Not used) | ON 1 2 3 4 5 6 7 8 |
| R410A | ON 1 2 3 4 5 6 7 8 |
| $CO_2$ (Not used) | ON 1 2 3 4 5 6 7 8 |
| Power save (Max Hz=Nominal) | ON 1 2 3 4 5 6 7 8 |
| (Not available) | ON 1 2 3 4 5 6 7 8 |
| 230 V | ON 1 2 3 4 5 6 7 8 |
| 400 V | ON 1 2 3 4 5 6 7 8 |





Все каталоги и инструкции здесь: https://splitsystema48.ru/instrukcii-po-ekspluatacii-kondicionerov.html

- **DSW5: H-LINK available / settings**

| Function | Set PINs |
|---|---|
| Not used | |
| Not used | |

- **DSW6: end resistance / fuse recovery**

| Function | Set PINs |
|---|---|
| Not used | |
| Not used | |

- **DSW7: unit control configuration**

| Function | Set PINs |
|---|---|
| Three phase | |
| Single phase | |
| Not used | |
| Inverter compresor | |
| Cancel zero-reset expansion valve | |
| Liquid injection enable | |

- **DSW8 (Pd) / DSW9 (Ps): setting Pd / Ps pressure sensor type**

| Function | Set PINs |
|---|---|
| Not used | |
| Pressure sensor R410A | |



Все каталоги и инструкции здесь: https://splitsystema48.ru/instrukcii-po-ekspluatacii-kondicionerov.html

- **Jumper lead setting (JP2): Automatic restart after power failure**

Keep the same status as before. Setting before shipment:

| JP2 |
|---|
| 1 |

**0 = Open; 1 = Short circuit**

The function selection using the jumper lead setting is shown in the table below.

| Setting | Function | Details |
|---|---|---|
| 0 | Enable | If this function is 'Enable', in case of power failure the unit will restart automatically once the power is recovered |
| 1 | Disable | |

## 3.4. LED INDICATION



- **LED1, LED2 and LED3: Power supply indication**

| Status | LED1 | LED2 | LED3 |
|---|---|---|---|
| Power supply ON | ON | OFF | OFF |
| Power supply OFF | OFF | OFF | OFF |
| | | Not available for Yutaki | |

- **LED4: Operation status indication**

| Status | LED4 |
|---|---|
| Unit stopped | OFF |
| Unit running | ON |
| Alarm | OFF |

- **LED5: Alarm indication**

| Status | LED5 |
|---|---|
| Normal | OFF |
| Alarm | ON |

- **LED6: Setting mode indication**

| Status | LED6 |
|---|---|
| Setting mode disable | OFF |
| Setting mode enable (DSW1#3: ON) | ON |



Все каталоги и инструкции здесь: https://splitsystema48.ru/instrukcii-po-ekspluatacii-kondicionerov.html

# 3.5. ACCESSORIES ELECTRICAL INSTALLATION

## 3.5.1. Pump kit

Yutaki is controlling the pump by itself. The pump kits A or B must be always connected according to the wiring below:

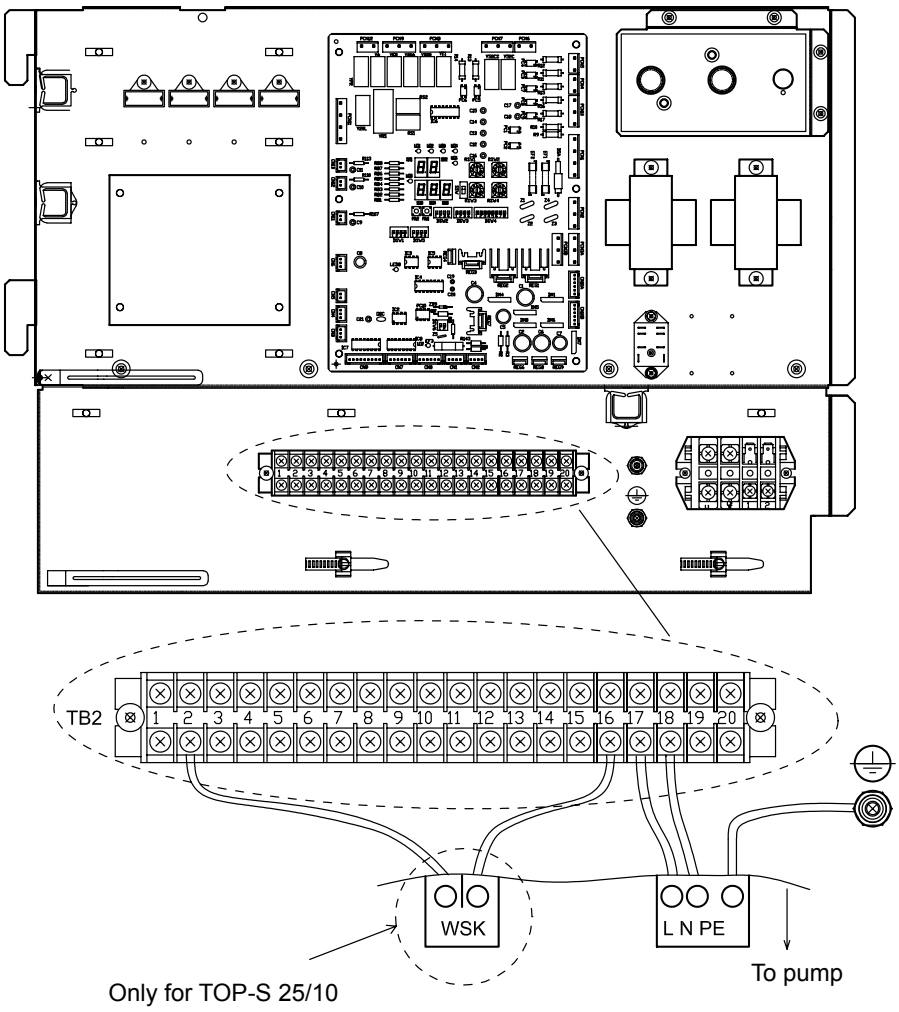


| Model | Protection type (Cut-out) | Connection terminals | |
|---|---|---|---|
| TOP-S 25/7 | Auto reset | 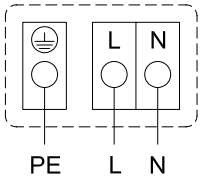  | 1~ 230 V, 50 Hz |
| TOP-S 25/10 | Manual reset | 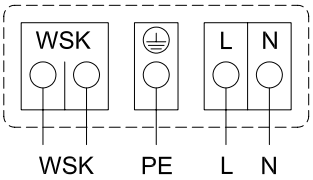  | |



Все каталоги и инструкции здесь: https://splitsystema48.ru/instrukcii-po-ekspluatacii-kondicionerov.html

| | NOTE |
|---|---|

- *The generic pump must be connected to terminals 17 and 18 in the terminal board (TB2).*
- *Terminals 17 and 18 were designed for 230V/3A. Take it into account when installing the pump. An external relay might be necessary. Do not install a pump with more than 3A consumption.*
- *Earth screw terminal is used for both pump and power supply wiring connection.*
- *Install a pump accordingly to the necessary supply water delivery.*
- *Hitachi recomends the use of accessory pump kits A or B.*
- *For TOP-S 25/10, connect wires from WSK to terminal 2 and 16 in the terminal board (TB2).*

| Hitachi pump kit accessory name | Code | Figure |
|---|---|---|
| Pump kit A | 9E500006 | |
| Pump kit B | 9E500007 | |

3

Follow the procedure described in "water pipe installation" to assemble the pump kit. Remove the front cover according to the procedures described in "main parts".

| | CAUTION |
|---|---|

- *Contamination. Risk of poisoning. The pumps must not be used for drinking water or food stuffs.*

## Electrical connection

| | DANGER |
|---|---|

- *Electrical hazard. Can cause serious injuries or death.*
  - *All electrical connections must be completed by a qualified and licensed electrician in strict compliance with local regulations.*
  - *Before working on the pump, switch OFF all the terminals of the supply voltage and wait five minutes due to the presence of a hazardous contact voltage (capacitors).*
  - *Check that all connections including potential-free contacts are neutral.*

- According to Part 1 of VDE 0730, the pump must be connected to the electrical supply by a solid wire equipped with a plug or an all-pole switch. The width of the contact gap must be at least 3 mm.
- Main fuse: 3.3 A, time-lag.
- The pump/ installation must be earthed in compliance with the applicable regulations.
- Check that the mains current and connection voltage comply with the data on the rating plate.



Все каталоги и инструкции здесь: https://splitsystema48.ru/instrukcii-po-ekspluatacii-kondicionerov.html

| | NOTE |
|---|---|
| | - *The motor may become damaged by overvoltage.*<br>- *Before applying voltage to the motor, double-check the voltage.* |

- Connect to the mains and connect the SK 602/ SK 622 and SK-C2 tripping unit (observe rating plate data) in accordance with the switching diagrams (Fig. 1).

**TOP-S**

- To guarantee protection against dripping water and to ensure strain relief of the cable gland (PG 13.5), a connecting cable with an external diameter of 10 - 12 mm is to be used and assembled as shown in Fig. 2. In addition, the cables in the vicinity of the cable gland are to be bent into a run-off loop to drain off any dripping water.

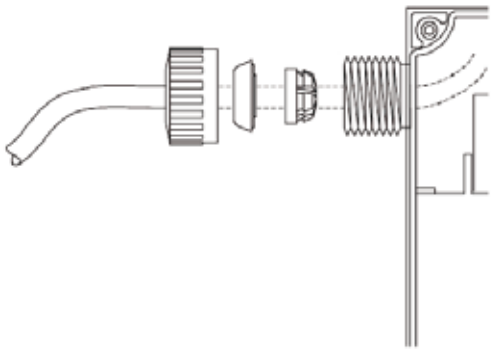

## ◆ Motor protection

| Pump | Max. power consumption $P_1$max (see rating plate data) | Tripping | Reset | Speed switching |
|---|---|---|---|---|
| TOP-S 25/7 1~230V | $P_1$max ≤ 245W | Internal switch off of the motor main power supply | Auto-reset-once the motor has cooled down the pump will automatically switch back on | Speed adjustment switch, 3 settings |
| TOP-S 25/10 1~230V | 330W ≤ $P_1$max ≤ 400W | WSK and external switch (SK602/ SK622, C-SK or other control unit) | Manually at the external switch box once the motor has cooled down | Speed adjustment switch, 3 settings |

## ◆ Operation

The system must be filled and vented properly. The pump rotor chamber will vent automatically after a short running period. Brief dry running will not damage the pump. The pumps wich are equipped with vent screws can be ventilated as follows if necessary.

1. Switch off the pump.
2. Close the shut-off valve on the discharge side.

| | CAUTION |
|---|---|
| | - *Risk of scalding.*<br>- *Depending on the fluid temperature and the system presssure, if the vent screw is completely loosened hot liquid or gas should escape or even shoot out at high pressure. Protect all electrical parts against the water released from the unit.* |



Все каталоги и инструкции здесь: https://splitsystema48.ru/instrukcii-po-ekspluatacii-kondicionerov.html

## 3.5.2. WEH- Water Electric Heater

### ◆ General check

1. Ensure that the field-supplied electrical components (main power switches, circuit breakers, wires, connectors and wire terminals) have been properly selected according to the electrical data indicated. Make sure that they comply with national and regional electrical codes.
2. Electrical connection must be done by professional installers.
3. Make sure that the power supply voltage is within +/-10% of the rated voltage.
4. Make sure that power supply has an impedance low enough to warranty not reduce the starting voltage more than 85% of the rated voltage.
5. Check that the earth wire is securely connected, tagged and locked in accordance with national and local codes.
6. Connect a fuse of specified capacity.
7. Check periodically the electrical connection tightening

| | ***DANGER*** |
|---|---|
| | - *Electrical hazard. Can cause serious injuries or death.*<br>  - *Do not connect or adjust any wiring or connections unless the main power switch is OFF.*<br>  - *Make sure that all the power sources are switched OFF.*<br>  - *Check that the earth wire is securely connected, tagged and locked in accordance with national and local codes.*<br>  - *Check and test to ensure that if there is more than one source of power supply, that all are turned OFF.*<br>  - *Check to ensure that the screws of the terminal block are tightly tightened.*<br>- *Crash hazard. Can cause serious injuries.*<br>  - *Check to ensure that Yutaki fans are stopped before electrical wiring work or periodical check is performed.* |

| | ***CAUTION*** |
|---|---|
| | - *Damage to wires. Risk of fire.*<br>  - *Protect the wires, drain pipe and electrical parts from water, rats or other small animals. If not protected, rats may damage unprotected parts.*<br>  - *Wrap the accessory packing around the wires, and plug the wiring connection hole with the seal material to protect the product from any condensed water and insects.*<br>  - *Tightly secure the wires with the cord clamp inside the unit.*<br>  - *Electrical wiring must comply with national and local codes. Contact your local authority in regards to standards, rules, regulations, etc.*<br>  - *Check that the ground wire is securely connected.* |

### ◆ Electrical installation

- Install the unit in a restricted area not accessible by the general public.
- Follow local codes and regulations when selecting field wires, circuit breakers and earth Leakage breakers. (See Heater manual).

Customer connection:





Все каталоги и инструкции здесь: https://splitsystema48.ru/instrukcii-po-ekspluatacii-kondicionerov.html

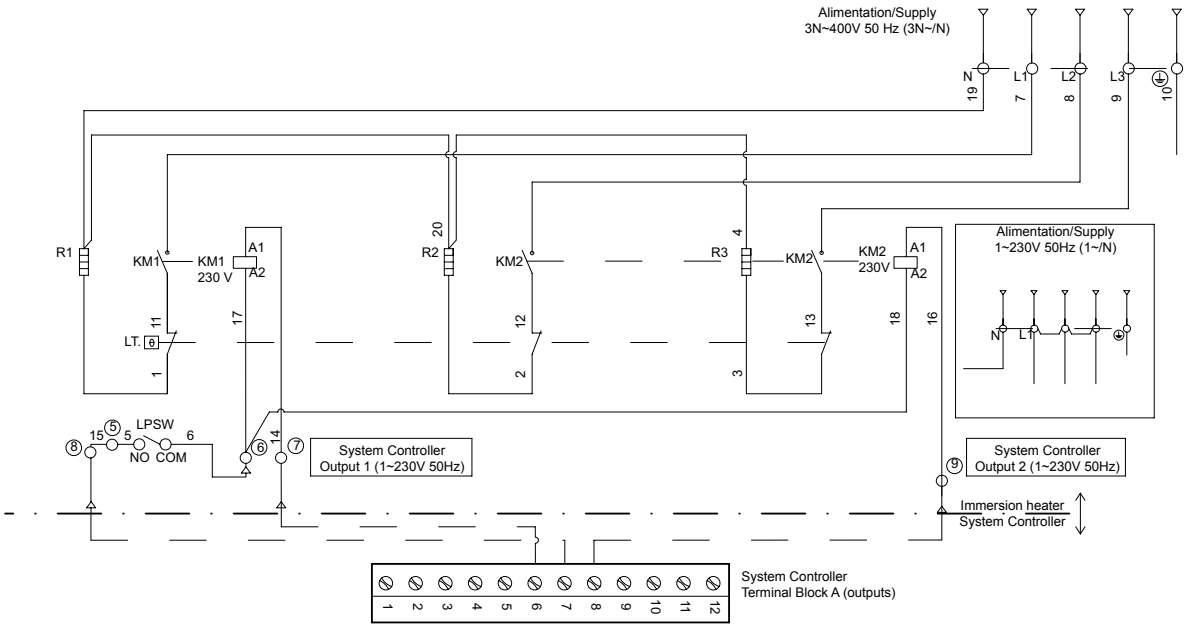


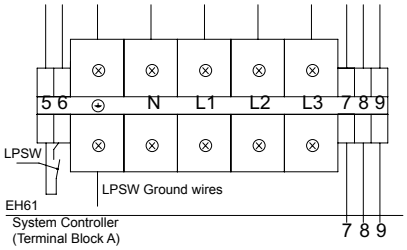


| Ref. | Name |
|---|---|
| KM1 | Power relay 2 kW |
| KM2 | Power relay 4 kW |
| LWPS | Pressure Switch NO (1 bar) |
| LT | Temperature Limiter |
| TB | Terminal board |
| — | Wiring to be perform to install |
| | |
| R1 | Electrical resistance 2 kW |
| R2 | Electrical resistance 2 kW |
| R3 | Electrical resistance 2 kW |

| | NOTE |
|---|---|
| - | *This connection is only for the electric heater EH 61.* |

## ◆ Wiring size

### • Connection wiring

The minimum thickness of the wiring that must be used in the installation.

| Power supply | Max. current (A) | Size of the power supply cable | Size of the control cable |
|---|---|---|---|
| | | EN 60335-1 | EN 60335-1 |
| 1~230V, 50Hz | 30 | 6mm² | 0.75mm² |
| 3N~400V, 50Hz | 10 | 2.5mm² | 0.75mm² |

### • Main switch protection

| Power supply | Max. current (A) | CB (A) | ECB Number of poles/A/mA |
|---|---|---|---|
| 1~230V, 50Hz | 30 | 32 | 2/40/30 |
| 3N~400V, 50Hz | 10 | 10 | 4/40/30 |



Все каталоги и инструкции здесь: https://splitsystema48.ru/instrukcii-po-ekspluatacii-kondicionerov.html

### 3.5.3. DHWT- Domestic Hot Water Tank

◆ **General check**

1. Ensure that the field-supplied electrical components (mains power switches, circuit breakers, wires, connectors and wire terminals) have been properly selected according to the electrical data indicated. Make sure that they comply with national and regional electrical codes.

2. Electrical connection must be done by professional installer.

3. Check to ensure that the power supply voltage is within +/-10% of the rated voltage.

4. Make ensure that power supply has an impedance low enough to warranty not reduce the starting voltage more than 85% of the rated voltage.

5. Check that the earth wire is securely connected, tagged and locked in accordance with national and local codes.

6. Connect a fuse of specified capacity.

7. Check periodically the electrical connection tightening.

| | ***DANGER*** |
|---|---|
| | - *Electrical hazard. Can cause serious injuries or death.*<br>  - *Do not connect or adjust any wiring or connections unless the main power switch is OFF.*<br>  - *Make sure that all the power sources are switched OFF.*<br>  - *Check that the earth wire is securely connected, tagged and locked in accordance with national and local codes.*<br>  - *Check and test to ensure that if there is more than one source of power supply, that all are turned OFF.*<br>  - *Check to ensure that the screws of the terminal block are tightly tightened.*<br>- *Crash hazard. Can cause serious injuries.*<br>  - *Check to ensure that Yutaki fans are stopped before electrical wiring work or periodical check is performed.* |

| | ***CAUTION*** |
|---|---|
| | - *Damage to wires. Risk of fire.*<br>  - *Protect the wires, drain pipe and electrical parts from water, rats or other small animals. If not protected, rats may damage unprotected parts.*<br>  - *Wrap the accessory packing around the wires, and plug the wiring connection hole with the seal material to protect the product from any condensed water and insects.*<br>  - *Tightly secure the wires with the cord clamp inside the unit.*<br>  - *Electrical wiring must comply with national and local codes. Contact your local authority in regards to standards, rules, regulations, etc.*<br>  - *Check that the ground wire is securely connected.* |





Все каталоги и инструкции здесь: https://splitsystema48.ru/instrukcii-po-ekspluatacii-kondicionerov.html

## ◆ Electrical wiring connection

The electrical wiring connection between DHWT, AquaFREE or Yutaki system controller and the electrical power installation is as follows:

Customer connection:

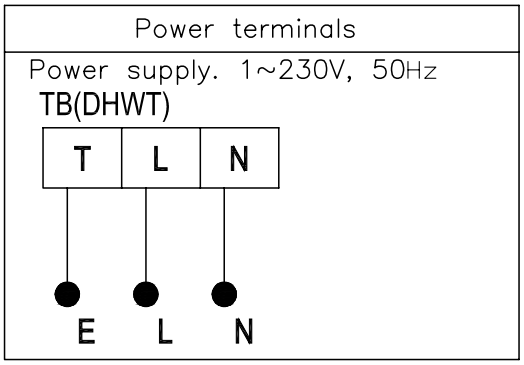


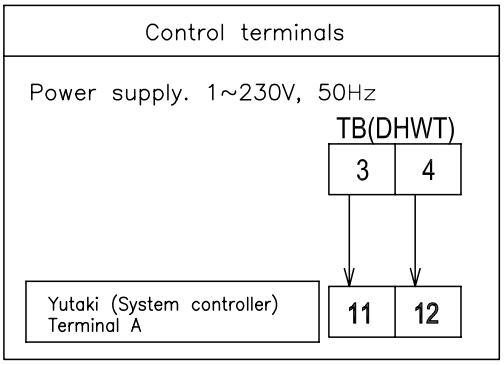


## ◆ Wire size

Recommended minimum sizes for field provided

| Model | Power Source | Max. Current | Power source cable size | Control cable size | CB | ELB (Number of poles/A/mA) |
|---|---|---|---|---|---|---|
| | | | EN60 335-1 | EN60 335-1 | | |
| DHWT | 1~ 230V 50Hz | 15A | 2,5mm² | 1mm² | 20A | 2/40/30 |

| | NOTICE |
|---|---|
| - *Follow local codes and regulations when selecting field wires, Circuit Breakers and Earth Leakage Breakers*<br>- *Use the wires which are not lighter than de ordinary polychloroprene sheated flexible cord (code designation H05RN-F).* | |



Все каталоги и инструкции здесь: https://splitsystema48.ru/instrukcii-po-ekspluatacii-kondicionerov.html

## ◆ Electrical wiring connection diagram

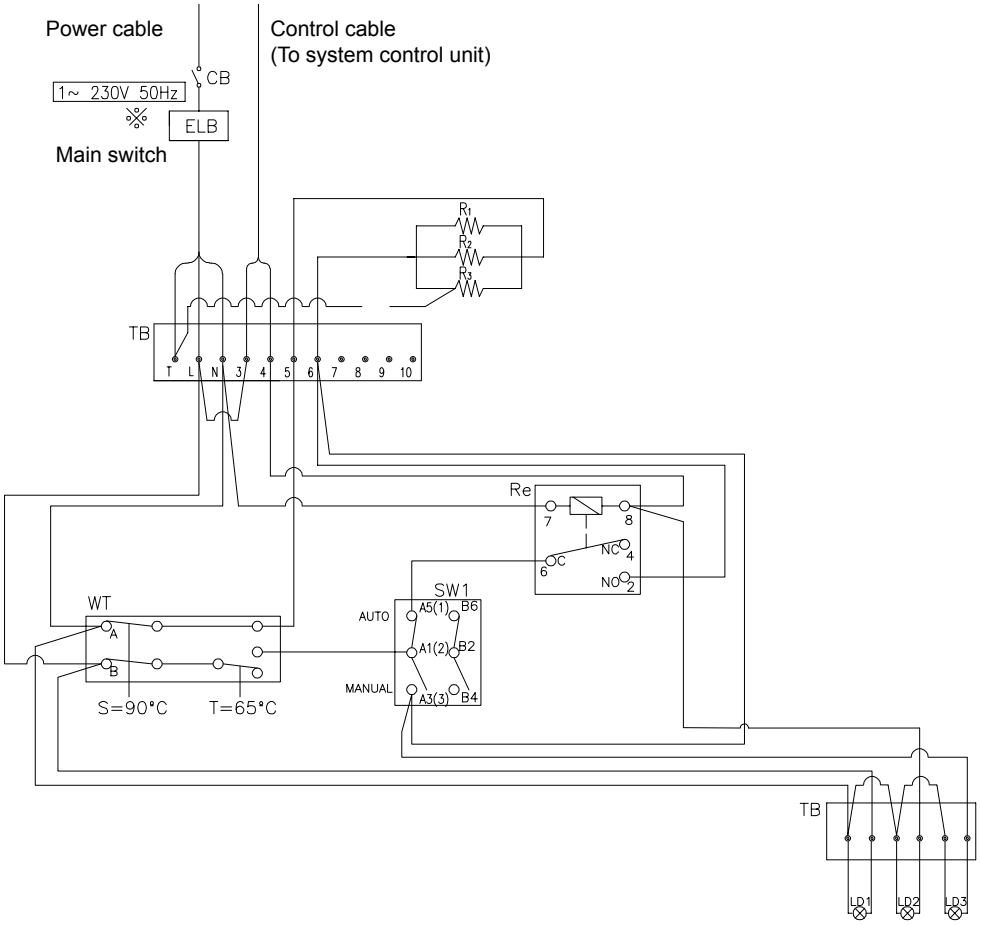


| Ref. | Name |
|---|---|
| WT | Regulating and Safety thermostat |
| Re | Auxiliary Relay |
| SW1 | Operating Mode switch |
| R 123 | Electrical Heater |
| LD1 | LED1: POWER ON |
| LD2 | LED2: AUTO MODE ON |
| LD3 | LED3: Electrical Heater Manual |
| TB | Terminal Board |
| L/N/T | Power supply |
| 3/4 | Control Heater Input |
| 5/6 | Electrical Heater Connection |





Все каталоги и инструкции здесь: https://splitsystema48.ru/instrukcii-po-ekspluatacii-kondicionerov.html

## ◆ Internal wiring

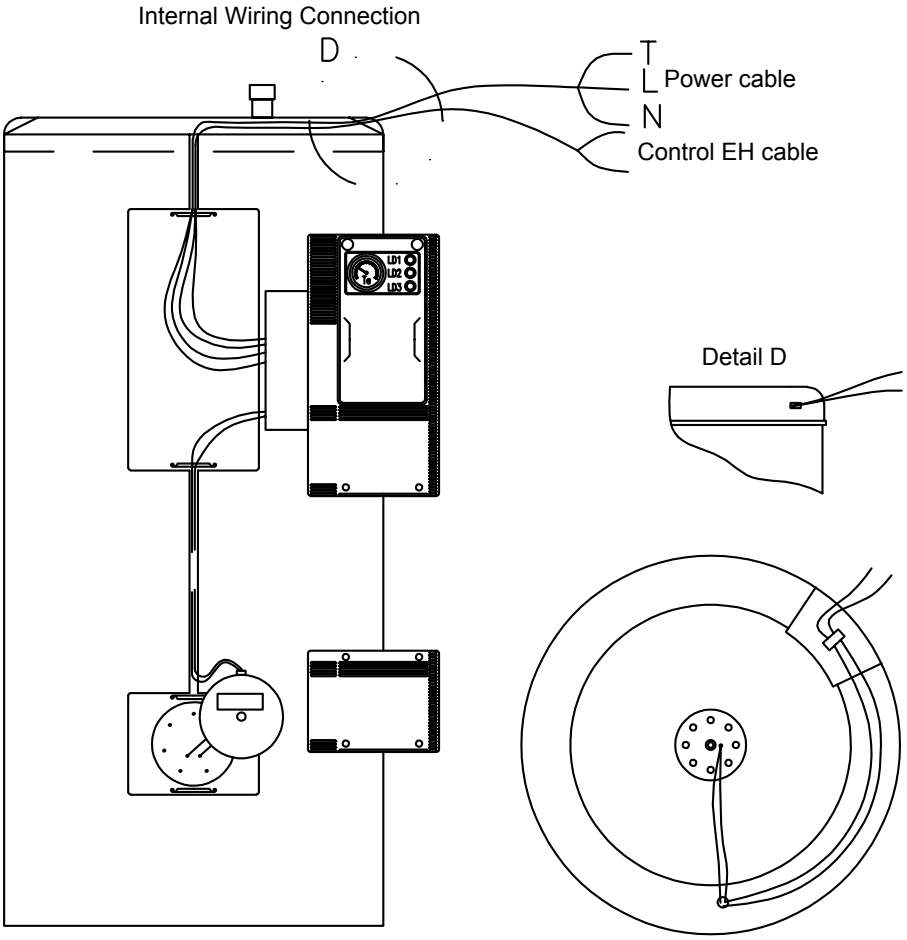


## ◆ Cathodic protection

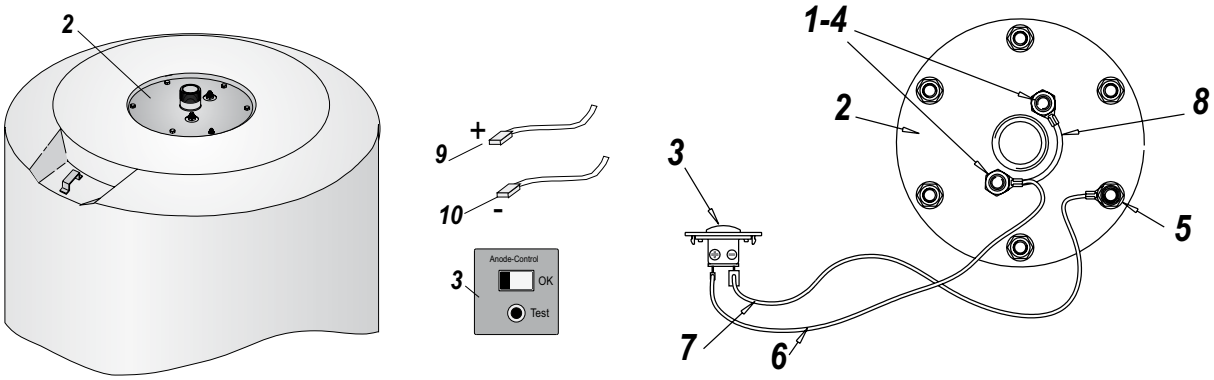


In order to protect the inside of the vessel from corrosion all the enamelled DHWT can be equipped whit a cathodic protection unit, comprising magnesium sacrifice anodes, charge gauges and wiring of connection.

It basically comprises a magnesium anode (1) mounted on the storage tank's connection plate (2), connected to the external anode load measured (3) which allow to know the anode consumption rate without having to dismantle it.



Все каталоги и инструкции здесь: https://splitsystema48.ru/instrukcii-po-ekspluatacii-kondicionerov.html

The electrical connection of the load measured (3) to the anode (1), is made through the wiring of connection (6):

- To the anode: U shaped terminal M10 (4)

- To the load measured: female Faston terminal 2.8 (10)

The electrical connection of the load measured (3) to the earth, is made through the wiring of connection (7):

-To earth: U shaped terminal M10 (5)

- To the load measured: female Faston terminal 6.3 (10)

| | CAUTION |
|---|---|
| | - *Check the magnesium anode load periodically by pushing the button. If the gauge is in the red zone, the magnesium anode must be replaced.*<br>- *Do not install the permanent cathode protection and the cathodic protection together.* |

### ◆ Titan protection accessory

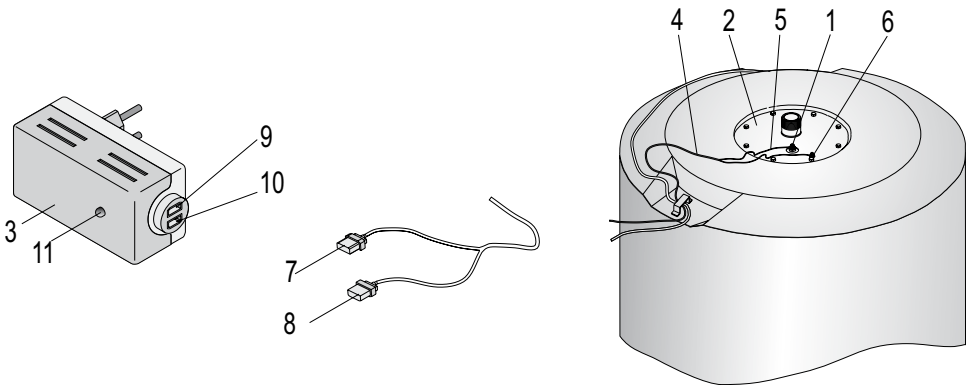


All the Hitachi DHWT can be equipped with the permanent cathode protection system which is totally automatic and maintenance free.

It basically comprises a titanium anode (1) mounted on the storage tank's connection plate (2) and connected to a potentiostat (3) which automatically regulates the input current to the anode, constantly measuring the potential of the storage tank), through the leads (4).Wiring the anode to the potentiostat by means of leads (4) is carried out in the following way:

-To the anode: connection (5), female Faston terminal.



Все каталоги и инструкции здесь: https://splitsystema48.ru/instrukcii-po-ekspluatacii-kondicionerov.html

-To earth: connection (6), U shaped terminal.

-To the potentiostat: connections at (9) and (10), pins (7) and (8) respectively.

| | NOTE |
|---|---|
| | - *Use original wires only. To avoid any risk of corrosion due to reverse polarity do not lengthen nor shorten the wires.*<br>- *Use a socket base near to the storage heater for this purpose.The protective anode starts comes into operation when the storage heater is full of water. When there is no water the control pilot light (11) lights up red and blinks on and off.*<br>- *If the pilot light (11) is green, this shows that the storage heater is receiving a protective current. If the pilot light is not on or lights up red and blinks, check the connections, contacts and mains supply. If this anomaly continues, contact the fitter or our Customer Technical Service Department.*<br>- *In the case of vertically installed storage heaters from which water is not going to be extracted for periods of more than 3 months, we recommend fitting an automatic purger at the D.H.W. outlet.*<br>- *If the storage heater is installed horizontally, we recommend the extraction of water at least once every 3 months.*<br>- *The potentiostat (3) and connecting wires (4) must not be disconnected, except when the storage heater is emptied.*<br>- *Do not disconnect the protection system during periods of absense (holidays, etc.).*<br>- *Occasionally check that the pilot light is working correctly (11).* |

## ◆ Electric heater

The electric heater is made of Incoloy alloy 825 and complies with the European Low Voltage Directive 2006/95/EC.

It comprises a flange that holds three U-Shaped heating elements for 2.5kw power resistances.

- **Replace electric heater**

The steps to be followed are:

1. Totally disconnect the unit from the main power supply.
2. With the help of a tool remove the heater to be replaced. Be careful not to damage the enamel surface in case of enamelled tanks.
3. Insert the new heater in the same position as the old one.
4. Connect again and plug into the main power supply.

- **Safety measures**

Before any intervention, totally disconnect the DHWT from the main power supply. All the connections circuits must be disconnected.

Installation, configuration, start up and maintenance of heating elements must be carried out by an authorised electrical fitter. All standards and regulations must be observed.

The user is responsible of ensuring that the essential requirements of the European Low Voltage Directive are respected.

Electric heating elements generates high temperatures. Precautions should be taken to protect goods and persons from accidental burns during the operation and after the equipment has been disconnected or installed.

Note minimum cable section: Resistances of 2.5kw recommended cable: H05SJ-K accordance with UNE 21027, and will have at least 2.5mm² section.



Все каталоги и инструкции здесь: https://splitsystema48.ru/instrukcii-po-ekspluatacii-kondicionerov.html

The tanks must be with a DHWT temperature control thermostat and an all-pole limiter thermostat (the setting of these two components must be compatible with the design parameters of storage tanks). The sensors must always be located at a higher level than the electric heater element.

We recommend installing appropriate safety devices (temperature safety device, safety level for heating liquids by natural convection, flow safety device for liquids in circulation, etc.).

DHWT(200/300)S-2.5H1E

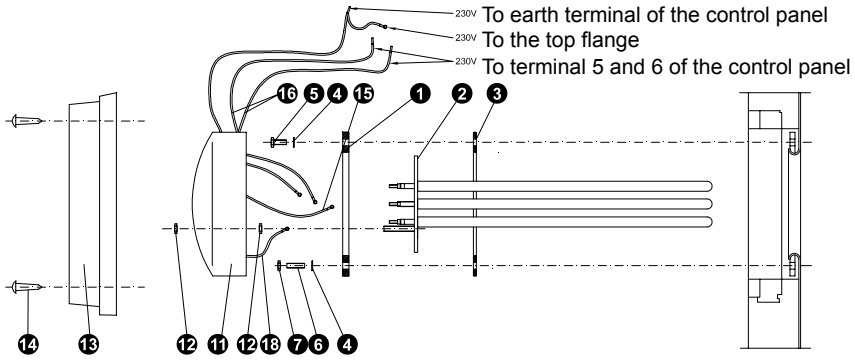


| Ref. | Name |
|---|---|
| ❶ | Flange |
| ❷ | Heater |
| ❸ | Seal |
| ❹ | Washers |
| ❺ | Screws |
| ❻ | Studs |
| ❼ | Nuts |
| ⓫ | Metal protective casing |
| ⓬ | Screws M6 |
| ⓭ | Panel |
| ⓮ | Screws M4 |
| ⓰ | Wires |
| ⓲ | Earth Wire |

DHWT(200/300)E-2.5H1E

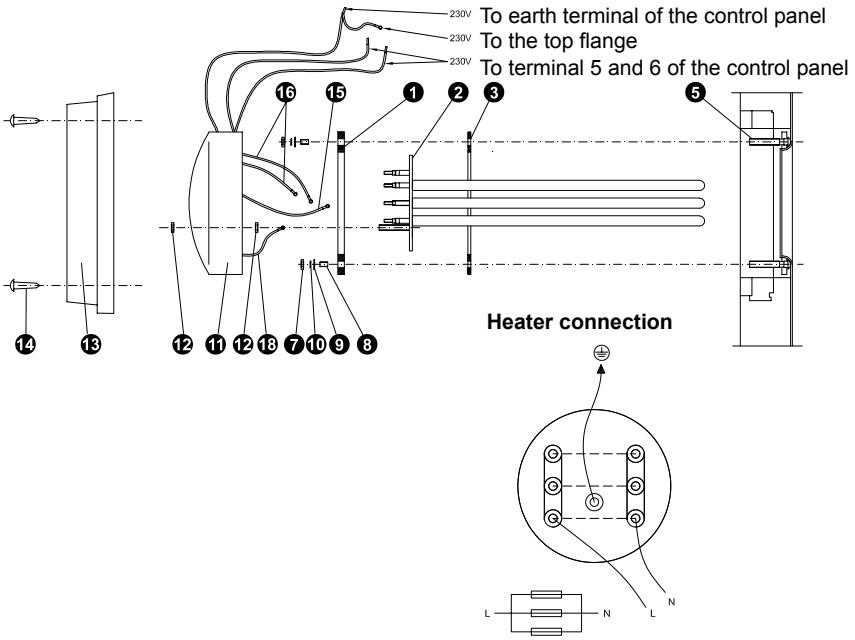


| Ref. | Name |
|---|---|
| ❶ | Flange |
| ❷ | Heater |
| ❸ | Seal |
| ❼ | Nuts |
| ❽ | Nylon bushing |
| ❾ | Nylon washers |
| ❿ | Metalic washers |
| ⓫ | Metal protective casing |
| ⓬ | Screws M6 |
| ⓭ | Panel |
| ⓮ | Screws M4 |
| ⓰ | Wires |
| ⓲ | Earth Wire |

3

## 3.6. ELECTRICAL WIRING DIAGRAMS

This sub-chapter shows the electrical wiring diagram for each unit of the Yutaki series.



Все каталоги и инструкции здесь: https://splitsystema48.ru/instrukcii-po-ekspluatacii-kondicionerov.html

## 3.6.1. Electrical wiring diagram for models RHUE-(3~6)AVHN

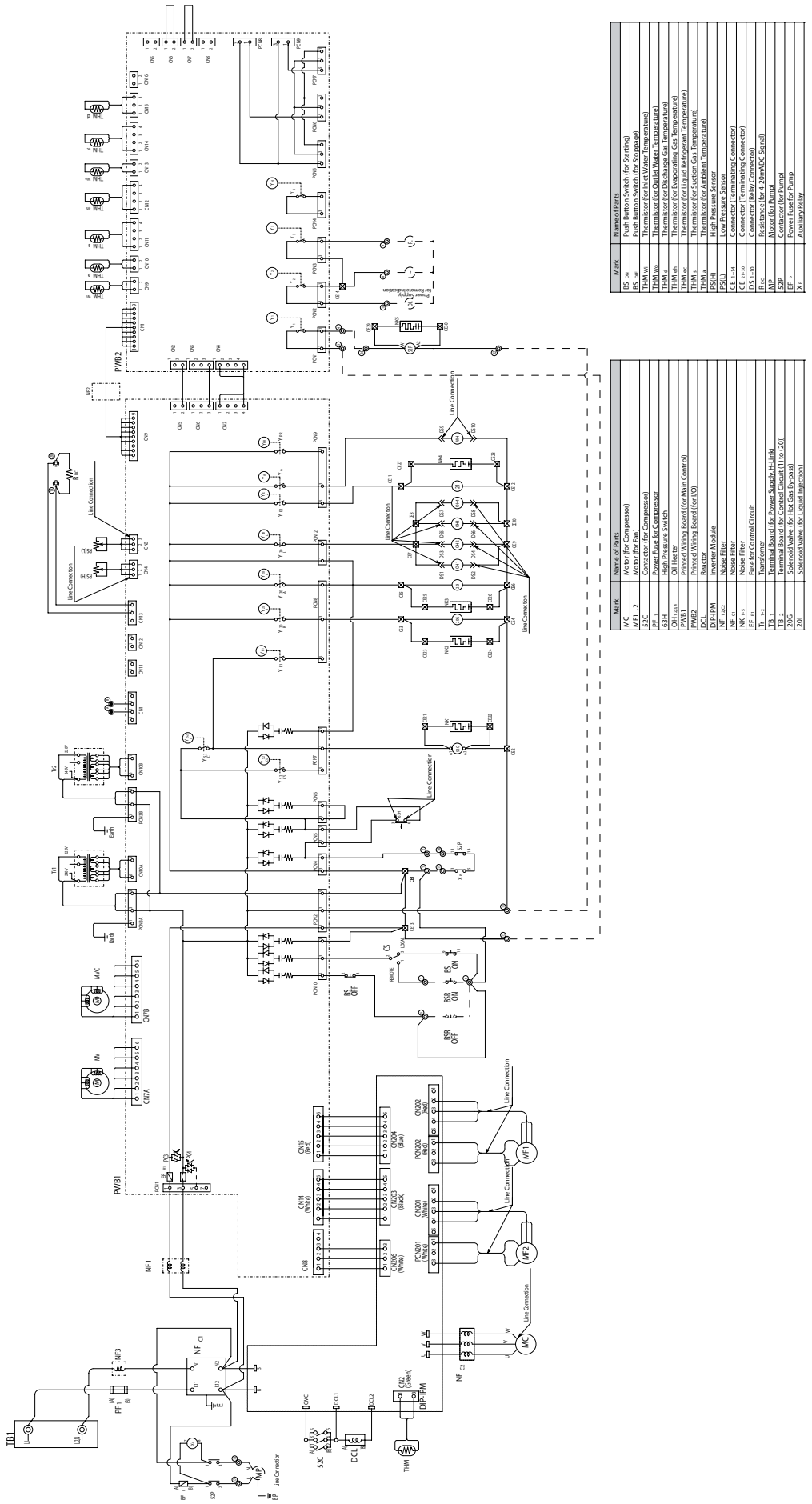




Все каталоги и инструкции здесь: https://splitsystema48.ru/instrukcii-po-ekspluatacii-kondicionerov.html

## 3.6.2. Electrical wiring diagram for RHUE-(5/6)AHN

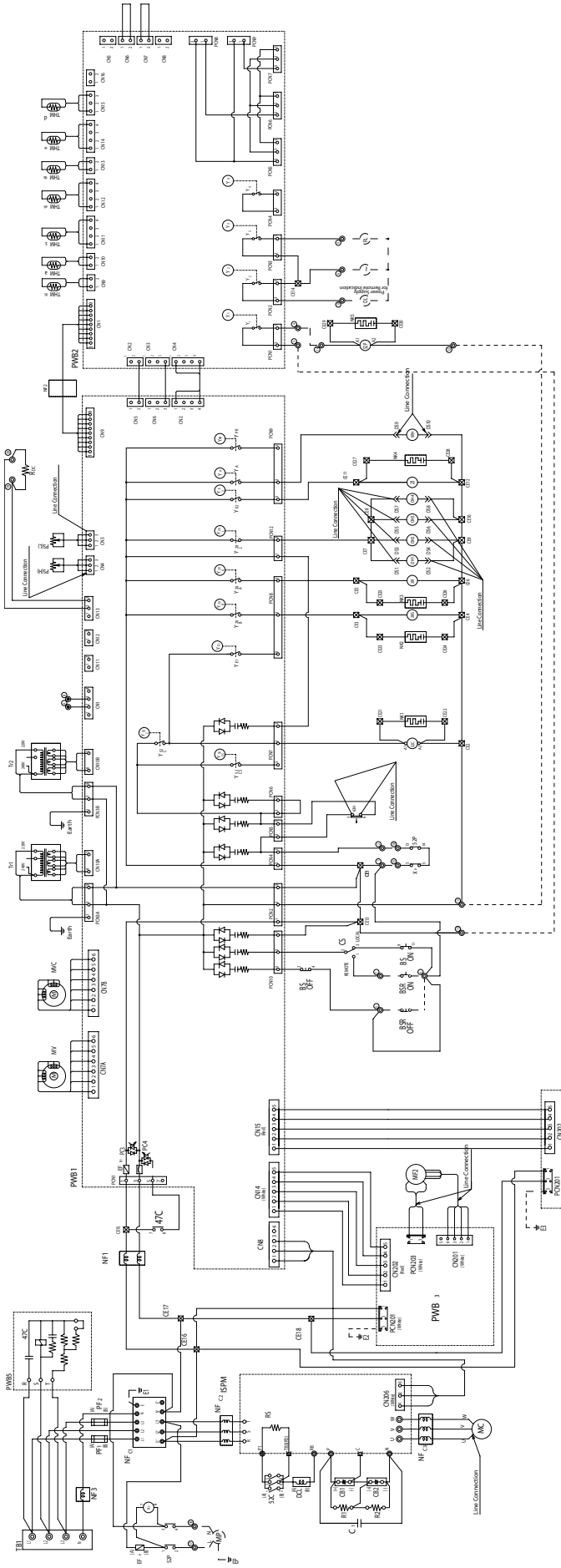

| Mark | Name of Parts |
|---|---|
| MC | Motor (for Compressor) |
| MF1, 2 | Motor (for Fan) |
| 52C | Contactor (for Compressor) |
| PF | Power Fuse for Compressor |
| 63H | High Pressure Switch |
| OH | Oil Heater |
| PWB1 | Printed Wiring Board (for Main Control) |
| PWB2 | Printed Wiring Board (for I/O) |
| PWB3,4 | Printed Wiring Board (for Fan Power Supply) |
| PWB5 | Printed Wiring Board (for Reverse Protection) |
| DCL | Reactor |
| CB | Capacitor |
| 1SPM | Inverter Module |
| C1 | Capacitor |
| R | Resistance (for Starting) |
| 47C | Reverse Protection Relay |
| NF | Noise Filter |
| NF | Noise Filter |

| Mark | Name of Parts |
|---|---|
| NK | Noise Filter |
| EF | Fuse for Control Circuit |
| Tr | Transformer |
| TB 1 | Terminal Board (for Power Supply, H-Link) |
| TB 2 | Terminal Board (for Control Circuit (1) to (20)) |
| 20G | Solenoid Valve (for Hot Gas By-pass) |
| 20I | Solenoid Valve (for Liquid Injection) |
| 21 | Magnetic 4-Way Valve |
| MVMVC | Electrical Expansion Valve |
| WH | Frozen Prevention Heater for Piping |
| BS | Push Button Switch (for Starting) |
| BS | Push Button Switch (for Stoppage) |
| CS | Changeover Switch |
| THM | Thermistor (for Inlet Water Temperature) |
| THM | Thermistor (for Outlet Water Temperature) |
| THM | Thermistor (for Discharge Gas Temperature) |
| THM | Thermistor (for Evaporating Gas Temperature) |

| Mark | Name of Parts |
|---|---|
| THM | Thermistor (for Liquid Refrigerant Temperature) |
| THM | Thermistor (for Suction Gas Temperature) |
| THM | Thermistor (for Ambient Temperature) |
| PS (H) | High Pressure Sensor |
| PS (L) | Low Pressure Sensor |
| CE | Connector (Terminating Connector) |
| CE | Connector (Terminating Connector) |
| DS | Connector (Relay Connector) |
| R | Resistance (for 4-20mADC Signal) |
| MP | Motor (for Pump) |
| 52P | Contactor (for Pump) |
| EF | Power Fuse for Pump |
| X | Auxiliary Relay |
| E | Earth |
| BS | Push Button Switch (for Starting) |
| BS | Push Button Switch (for Stoppage) |
| RL, OL | Pilot Lamp |

3



Все каталоги и инструкции здесь: https://splitsystema48.ru/instrukcii-po-ekspluatacii-kondicionerov.html

**Все каталоги и инструкции здесь:** https://splitsystema48.ru/instrukcii-po-ekspluatacii-kondicionerov.html

# 4. CONTROLLER PACK

This chapter presents the control system flowcharts for the Yutaki series.

## CONTENTS

4.1. System configuration, settings and control system ....73

4.1.1. Description ....73
4.1.2. System controller overview ....73
4.1.3. Contents of the controller pack ....74
4.1.4. Quick-start installation steps ....74
4.1.5. Abbreviations & terminology ....75
4.1.6. Application configurations ....75
4.1.7. Principle of bi-valent or mono-energetic operation ....76
4.1.8. Mono-Valent Systems (CONF 1) ....77
4.1.9. Mono-Energetic Systems (CONF 2) ....78
4.1.10. Bi-valent Systems - Parallel Operation (CONF3) ....79
4.1.11. Bi-Valent System - Parallel Operation - Mixing Loop (CONF 4) ....80
4.1.12. Bi-Valent System - Serial Operation (CONF 5) ....80

4.2. Supply setpoint calculation ....81

4.3. Heating control functions ....82

4.3.1. Heating Circuit – General ....82
4.3.2. Heating Characteristic Curve (OTC Control) ....82
4.3.2.1. Room Setpoint Parallel Shift ....83
4.3.2.2. Room Temperature Compensation ....84
4.3.3. Heating Circuit Minimum/Maximum Temperature Limits ....84
4.3.4. Heating Circuit (Secondary) Pump ....85
4.3.5. Automatic No-Load Function ....85

4.4. DHW control functions ....85

4.4.1. DHW Storage Tank Loading ....85
4.4.2. DHW Control ....86
4.4.3. Maximum DHW Loading Time ....87
4.4.4. DHW Electric Heater ....88
4.4.4.1. DHW Electric Heater ....88
4.4.4.2. Using the Boiler for DHW loading ....89
4.4.5. Using the Boiler for DHW loading ....90
4.4.6. Response of the Heat pump to a DHW demand ....90
4.4.7. DHW Time Program ....90

4.5. Heatpump control functions ....91

4.5.1. Heatpump Control ....91
4.5.2. Heatpump Setting Control Signal ....92
4.5.3. Heatpump Sensor Offset ....92
4.5.4. Heatpump Maximum Return High Limit ....93
4.5.5. Heatpump Operating Limits ....93
4.5.6. Tariff Switch (Heat Pump blocking) Input ....94





Все каталоги и инструкции здесь: https://splitsystema48.ru/instrukcii-po-ekspluatacii-kondicionerov.html

4.6. Boiler control functions ..... 95

4.6.1. Boiler Control ..... 95
4.6.2. Supply-Return Difference Check ..... 96
4.6.3. Boiler Minimum On / Off Times ..... 97
4.6.4. Boiler Waiting Time ..... 97
4.6.5. Maximum Outdoor Temperature for Boiler Operation ..... 97

4.7. Electric heater control functions ..... 98

4.7.1. Electric Heater Control ..... 98
4.7.2. Supply-Return Difference Check ..... 99
4.7.3. Electric Heater Waiting Time ..... 100
4.7.4. Electric Heater Return High Limit Check ..... 100
4.7.5. Maximum Outdoor Temperature for Electrical Heater Operation ..... 101

4.8. Mixing valve control functions ..... 101

4.8.7. Mixing Valve Control ..... 101
4.8.2. Mixing / Bypass Valve Control ..... 102
4.8.3. Mixed Heating Circuit Maximum Temperature Limit Protection ..... 102
4.8.4. Mixing Valve Opening Delay ..... 102

4.9. General functions ..... 103

4.9.1. System Frost Protection ..... 103
4.9.2 Automatic Summer Switch-Off ..... 103
4.9.3. Pump and Valve Seizure Protection ..... 104
4.9.4. Screed Function (Drying for New Floors) ..... 104

4.10. Parameter tables ..... 105

4.10.1 Installer Parameters ..... 105
4.10.1. Engineering Parameters ..... 106

4.11. Conversion table: heat pump supply temperature to mA ..... 108

4.12. R resistance tables ..... 108

4.13. Technical data ..... 109

4.13.1. System Controller (XEK23232 A) ..... 109
4.13.2. Water Temperature Sensor (XEK35524 A) ..... 109
4.13.3. Outdoor Temperature Sensor (XEK35438 A) ..... 109

4.14. Mounting ..... 110

4.14.1. Fitting or removing the front cover ..... 110
4.14.2. Wall Mounting ..... 110
4.14.3. Mounting on a DIN-rail ..... 111

4.15. Mounting the Sensors ..... 111

4.15.1. Water Temperature Sensor ..... 111
4.15.2. Outside Temperature Sensor ..... 112



Все каталоги и инструкции здесь: https://splitsystema48.ru/instrukcii-po-ekspluatacii-kondicionerov.html

4.16. Electrical wiring ..... 113

4.16.1. Wiring access ports ..... 113
4.16.1. Wiring connections ..... 114
4.16.2 System component connections ..... 115

4.17. System configurations ..... 118

4.18. User interface ..... 123

4.18.1. Display ..... 123
4.18.2. Controls ..... 123

4.19. Installation configuration settings ..... 124

4.19.1. Reviewing and setting the installer parameters ..... 124
4.19.2. Installer parameter list ..... 125

4.20. System testing ..... 126

4.20.1. System start-up ..... 126
4.20.2. SYSTEM TEST ..... 126
4.20.3. REVIEWING THE OPERATIONAL DATA ..... 127
4.20.4. MANUALLY OVERRIDING THE OUTPUTS ..... 127

4.21. Expanding the system ..... 128

4.21.1. Additional mixing zone ..... 128
4.21.2. Binding RF components together ..... 129

4.22. System MMI Pack (Room unit and RF receiver) ..... 129

4.22.1. Room Unit installation guide ..... 129
4.22.1.1. Description ..... 129
4.22.1.2. Installation information ..... 130
4.22.1.3. Installing the System MMI Pack ..... 130
4.22.1.4. Installing the RF Receiver ..... 131
4.22.2. Installing the Room Unit ..... 132
4.22.2.1. Power up ..... 132
4.22.2.2. RF Communication check (test mode) ..... 132
4.22.2.3. Locating the Room Unit ..... 133
4.22.3. Communication loss ..... 133
4.22.4. Installer mode ..... 134
4.22.4.1. Entering installer mode ..... 134
4.22.4.2. Fail-Safe mode setup ..... 134
4.22.4.3. Using the Room Unit for specific applications ..... 135
4.22.4.4. Using the special features of the Room Unit ..... 135
4.22.5. Installer parameters table ..... 136
4.22.5.1. Category 1 - Room Unit settings ..... 136
4.22.5.2. Category 2 - System settings ..... 137
4.22.6. Binding / Rebinding procedure ..... 137
4.22.7. Room Unit user guide ..... 138
4.22.7.1. Setting-up ..... 139
4.22.7.2. Programming ..... 140
4.22.7.3. Operating ..... 142





Все каталоги и инструкции здесь: https://splitsystema48.ru/instrukcii-po-ekspluatacii-kondicionerov.html

4.23. Device control system ..... 143

4.24. Yutaki unit PCB ..... 144

4.25. Safety and control device setting ..... 145

4.25.1. Defrost operation control ..... 147
4.25.2. Control of expansion valve ..... 149



Все каталоги и инструкции здесь: https://splitsystema48.ru/instrukcii-po-ekspluatacii-kondicionerov.html

# 4.1. SYSTEM CONFIGURATION, SETTINGS AND CONTROL SYSTEM

## 4.1.1. Description

The System Controller is a configurable outdoor-temperature-compensated heating controller.

The System Controller is a part of the Heat Pump Controller Pack and is linked to the other components of the hydronic control system, such as the wireless Room Unit, RF Receiver, Water Temperature Sensor and Outside Sensor.

The Room Unit is connected to the System Controller via radio signals, enabling simpler installation and offering the end user a choice to operate the system.

The System Controller operates the heat pump, electric heater or boiler, valves and pumps to ensure optimal operation of the heating system.

The System Controller has an LCD display with a simple menu structure operated by five buttons, so that it can easily be configured to many different applications with specific installation settings.

| | ***NOTE*** |
|---|---|
| | - *When performing any work with this product (installation, mounting, start-up), all instructions given by the manufacturer and in particular the safety instructions provided in the installation instructions must be followed.*<br>- *The System Controller may only be installed and mounted by authorised and suitably trained personnel.*<br>- *If the unit is modified in any way, except by the manufacturer, all warranties concerning operation and safety are invalidated.*<br>- *Make sure that local standards and regulations are respected at all times.*<br>- *Use only accessory equipment that comes from or has been approved by Honeywell or Hitachi.* |

| | ***CAUTION*** |
|---|---|
| | - *Electrical hazard. Can cause serious injuries or death.*<br>  - *Disconnect the mains power supply before the installation of the System Controller. Do not reconnect the power supply until all installation work is completed.*<br>  - *Before the controller is dismantled, disconnect the main power supply.* |

4

## 4.1.2. System controller overview

The System Controller is designed for controlling the heat pump in a mono-valent, mono-energetic or bi-valent heating system. It provides efficient control and reduces energy use while maintaining comfort in the building.

- Modulating control of heat pump.
- Control of an Auxiliary heat source (electric heater or boiler).
- Outside temperature compensated (OTC) control.
- Control of heating circuit pumps/valves and, optionally, domestic hot water storage.
- System frost protection.

The functionality of the System Controller depends on the installed components and the selected configuration. The System Controller is designed in a way that it can be configured and upgraded to meet many application requirements.



Все каталоги и инструкции здесь: https://splitsystema48.ru/instrukcii-po-ekspluatacii-kondicionerov.html

### 4.1.3. Contents of the controller pack

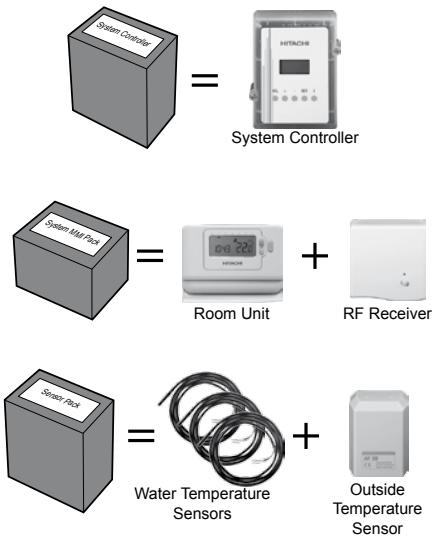


- System Controller
  - Controls the heat pump.
  - Controls other system components.
  - Measures system sensors.
  - Allows system configuration and settings.
- System MMI Pack
  - Room Unit - The user interface for the system and allows time / temperature profile programming.
  - RF Receiver - Receives wireless signals from the Room Unit and is wired directly to the System Controller.
- Sensor Pack
  - 3 x Water Temperature Sensors.
  - 1 x Outside Temperature Sensor.
  - Sensors connect directly to System Controller.

### 4.1.4. Quick-start installation steps

1. Select which type of system you wish to install.
2. Determine where the various system components should be installed.
3. Mount the system components- for System Controller and Sensors: see installation instructions in the System MMI Pack.
4. Connect the Sensors, RF Receiver, heat pump and other system components to the System Controller according to your selected system configuration.
5. Change installer parameters on the System Controller according to your selected system configuration.
6. Review settings and time/temperature profile on the Room Unit (see installation instructions in the System MMI Pack).
7. Test the system.
8. Show end-user how to operate the Room Unit.
9. Leave literature pack with the end-user.



Все каталоги и инструкции здесь: https://splitsystema48.ru/instrukcii-po-ekspluatacii-kondicionerov.html

## 4.1.5. Abbreviations & terminology

**Mono-Valent**
One heating source (electric Heat Pump)
**Mono-Energetic**
One energy source (electric Heat Pump and electric heater)
**Bi-Valent**
Two heating sources (electric Heat Pump and gas/oil Boiler)
**OTC**
Outside Temperature Compensated Control
**DHW**
Domestic Hot Water
**Zone 1**
The main heating loop controlled by the System Controller.
**Zone 2**
The extension mixed heating loop controlled by the Extension Controller.

**TSUP**
Supply Water Temperature
**TRET**
Return Water Temperature
**TDHW**
DHW Temperature
**TEXT**
Outside (external) Air Temperature
**TMIX**
Mixed Water Temperature
**TR1**
Room Temperature
**V**
Mixing Valve Position
**FAUL**
Fault status
**SSUP**
Overall system supply setpoint
**S1**
Zone 1 supply setpoint
**SR1**
Zone 1 room temperature setpoint
**S2**
Zone 2 supply setpoint
**DSET**
DHW setpoint
**SDHW**
DHW supply setpoint



## 4.1.6. Application configurations

The System Controller can be used for several different hydraulic system configurations, including mono-valent systems, mono-energetic systems with auxiliary electric heater, and bi-valent systems with gas/oil boiler. The hydraulic system configuration should be selected by setting the parameter CONF.

| Hydraulic Configuration | Description | Heat Pump | Electric Heater | Boiler | DHW | Direct Circuit | Mixing Circuit |
|---|---|---|---|---|---|---|---|
| CONF 1 | Mono-valent System<br>Heat Pump only<br>Direct Circuit | ✓ | | | (✓) | ✓ | |
| CONF 2 | Mono-Energetic System<br>Heat Pump and Electric Heater<br>Direct Circuit | ✓ | ✓ | | (✓) | ✓ | |
| CONF 3 | Bi-Valent Parallel System<br>Heat Pump and Boiler<br>Direct Circuit | ✓ | | ✓ | (✓) | ✓ | |
| CONF 4 | Bi-Valent Series System<br>Heat Pump and Boiler<br>Mixing Circuit | ✓ | | ✓ | | | ✓ |
| CONF 5 | Bi-Valent Parallel System<br>Heat Pump and Boiler<br>Mixing By-pass Circuit | ✓ | | ✓ | (✓) | | ✓ |



Все каталоги и инструкции здесь: https://splitsystema48.ru/instrukcii-po-ekspluatacii-kondicionerov.html

- **DHW Storage**
  The System Controller can be used in a system which has a DHW storage tank, with either a diverting valve or pump. If the system has a separate DHW pump, then a hydraulic separator or buffer tank has to be used to ensure proper hydraulic balancing of the system.
  The DHW system type is selected by an installer parameter (P1)

- **Buffer Tank or Hydraulic Separator**
  When a hydraulic separator or buffer tank is used in CONF 1 & 2, the system will contain a secondary pump on the distribution side of the separator/buffer. In this case it is necessary to set installer parameter P2 to 1.
  In bi-valent systems (CONF 3,4,5) a hydraulic separator or buffer tank is always needed.

## 4.1.7. Principle of bi-valent or mono-energetic operation

- **Function**
  Bi-valent and mono-energetic systems use an auxiliary heat source (boiler or electric heater respectively) in addition to the heat pump.

  At higher outdoor temperatures, the heat pump can provide all the heating requirements of the system, and it is not necessary to switch on the auxiliary heat source. However at lower outdoor temperatures, the electric heater or boiler is used to provide the increased heating demand. The changeover point for bi-valent or mono-energetic operation is called the balance point. A +/-0.5K control differential is applied to the switching between the operating modes.

  Outdoor temperature (TEXT) > Balance Point (BP)+0.5K, the boiler or electric heater is not used. (Exception is that the boiler can be used for DHW loading.)
  Outdoor temperature (TEXT) < Balance point (BP)-0.5K, the system controller determines whether to switch on the boiler or electric heater depending on the heating requirements. Refer to the sections on Boiler Control and Electric Heater Control for more details.

- **Installer Parameters**
  P15 Maximum Outdoor Temperature for Boiler/Electric Heater Operation = Balance Point (BP) (default 0°C)
  P14 Minimum Outdoor Temperature for Heat Pump Operation (CONF 3,4,5 only) (default -20°C)

| | ***NOTE*** |
|---|---|
| - | *Parameter P15 can be set to OFF, in which case the boiler or electric heater is allowed to operate at all outdoor temperatures* |
| - | *Parameter P14 can be set to OFF, in which case the heat pump is allowed to operate at all outdoor temperatures.* |

- **Configuration Specific**
  - CONF 2 Mono-Energetic Systems
    The electric heater is used to “top-up” the energy required for the system. The System Controller tries to ensure that the heat pump is always running when the electric heater is used, but there may be some circumstances where the electric heater is providing all the energy for the heating system.

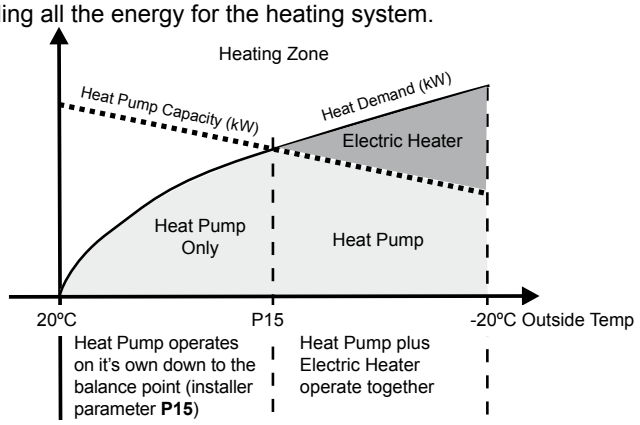




Все каталоги и инструкции здесь: https://splitsystema48.ru/instrukcii-po-ekspluatacii-kondicionerov.html

- CONF 4 Bi-Valent Series System
  The boiler is used to top-up the energy required for the system, but when the heat pump is outside it's operating limits, the boiler will provide all of the heating requirements.

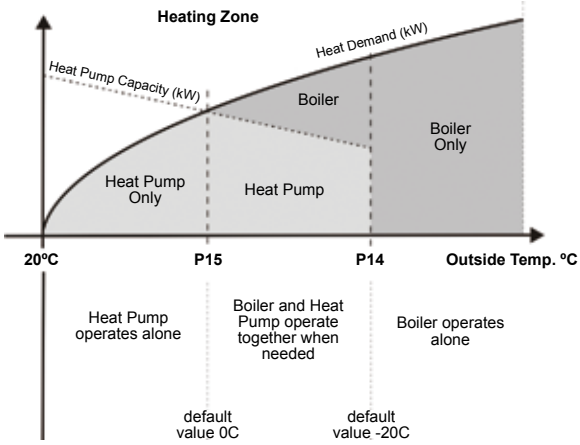


- CONF 3,5 Bi-Valent Parallel Systems
  The normal operation in these systems is that when the heat pump cannot meet the heating load, the boiler will take over the full energy requirements of the system (alternative operation).
  Alternative Operation can be achieved by setting P14=P15. This means that either the heat pump <u>or</u> the boiler operate but not the two together (exception is during DHW demand).
  Important Note: P14 should never be set higher than P15, otherwise incorrect operation will result.

## 4.1.8. Mono-Valent Systems (CONF 1)

4

- **Summary**

  In mono-valent systems, the heat pump is the sole provider of heating energy to the system. The Heat Pump is sized to provide 100% of the heating requirements on the coldest day of the year. It is recommended for low-energy houses and for moderate climates without severe winters. Used in new builds or in boiler-replacement applications.

  This configuration is suitable for low-temperature radiators and underfloor heating systems.

- **Important Parameter Settings**
  CONF = 1
  P1 = 0,1,2 according to DHW system type.
  P2 = 0,1 according to whether a buffer tank/hydraulic separator and secondary pump is installed.
  P4 = heating curve according to building and system characteristics.
  It is also recommended to review all parameter settings, and make modifications as required by the installation.
  In order to achieve higher DHW temperatures, the system can operate with an auxiliary DHW electric heater.

- **Example**
  Mono-Valent System with DHW.
  DHW controlled by diverting valve
  Auxiliary DHW electric heater.

| | |
|---|---|
| CONF=1 | Mono-valent system |
| P1=1 | DHW valve |
| P2=0 | no secondary pump |

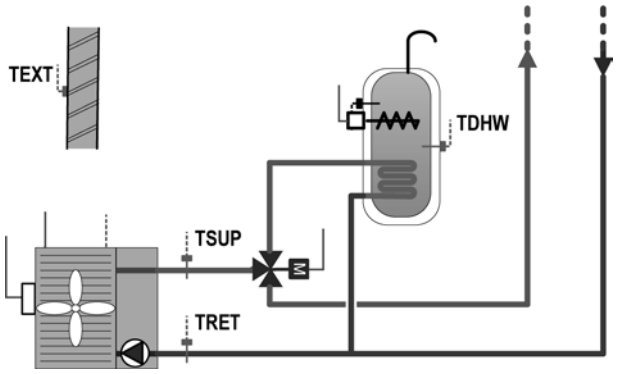




Все каталоги и инструкции здесь: https://splitsystema48.ru/instrukcii-po-ekspluatacii-kondicionerov.html

- **Example**
  Mono-Valent System with DHW.
  Hydraulic separator or buffer tank.
  Secondary pump for heating system.
  DHW controlled by separate pump.
  Auxiliary DHW electric heater.

| | |
|---|---|
| CONF=1 | Mono-valent system |
| P1=2 | DHW pump |
| P2=1 | Secondary pump |

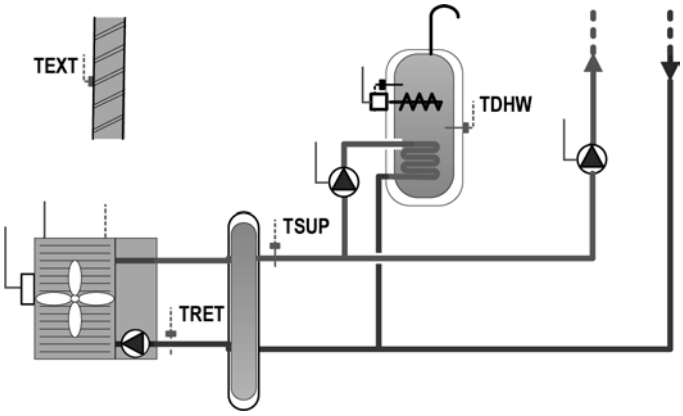


## 4.1.9. Mono-Energetic Systems (CONF 2)

- **Summary**
  In mono-energetic systems, the heat pump is supplemented by a 3-stage electric heater to provide additional heating energy to the system. The Heat Pump is sized to provide around 60% of the heating requirements on the coldest day of the year, and will typically provide 90-95% of the heating requirements over the whole heating season. An electric auxiliary heater is used to provide the additional heating required on cold days. Used in new builds or in boiler-replacement applications.

- **Important Parameter Settings**
  CONF = 2
  P1 = 0,1,2 according to DHW system type.
  P2 = 0,1 according to whether a buffer tank/hydraulic separator and secondary pump is installed.
  P4 = heating curve according to building and system characteristics.
  P33 = 5K (electric heater return high limit offset)

  The Electric Heater Return High Limit is an important check to help ensure that the heat pump operates as much as possible even when higher supply temperatures are required, thus emphasising energy economy operation. To enable this feature parameter P33 (return temperature limit offset) should be set to a value of 5K. Refer to the section on Electric Heater Control for more information.

  It is also recommended to review all parameter settings, and make modifications as required by the installation.
  In order to achieve higher DHW temperatures, the system can operate with an auxiliary DHW electric heater.

- **Example**
  Mono-Energetic System with DHW.
  DHW controlled by diverting valve
  Auxiliary DHW electric heater.

| | |
|---|---|
| CONF=2 | Mono-energetic system |
| P1=1 | DHW valve |
| P2=0 | no secondary pump |

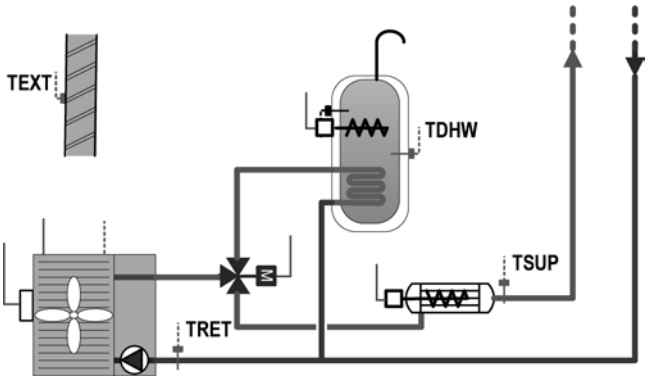




Все каталоги и инструкции здесь: https://splitsystema48.ru/instrukcii-po-ekspluatacii-kondicionerov.html

- **Example**
  Mono-Energetic System with DHW.
  Hydraulic separator or buffer tank.
  Secondary pump for heating system.
  DHW controlled by separate pump.
  Auxiliary DHW electric heater.

  CONF=1 Mono-energetic system
  P1=2 DHW pump
  P2=1 Secondary pump

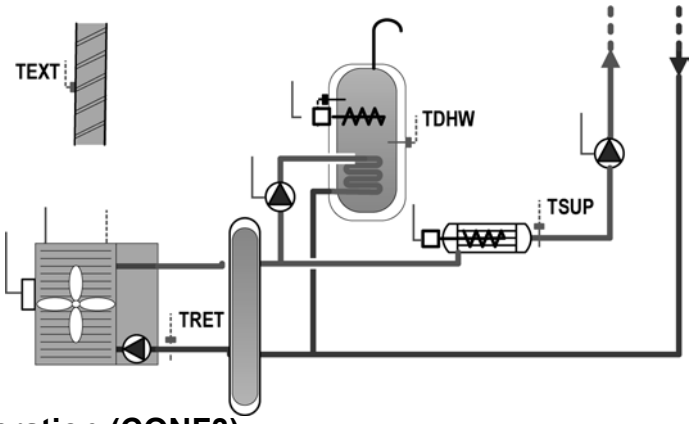


## 4.1.10. Bi-valent Systems - Parallel Operation (CONF3)

- **Summary**
  This is a bivalent system where the boiler is configured in parallel with the heat pump. A hydraulic separator or buffer tank has to be used to ensure proper hydraulic balancing. This system is recommended for retrofit (upgrade) applications where an existing gas/oil boiler will be retained to provide the full heating requirements on the coldest days of the year

- **Important Parameter Settings**
  CONF = 3
  P1 = 0,1,2 according to DHW system type.
  P4 = heating curve according to building and system characteristics.

  It is also recommended to review all parameter settings, and make modifications as required by the installation.

4

- **Example**
  Bi-Valent System with DHW.
  DHW controlled by diverting valve
  Hydraulic separator or buffer tank.

  CONF=3 Bi-valent Parallel system
  P1=1 DHW valve

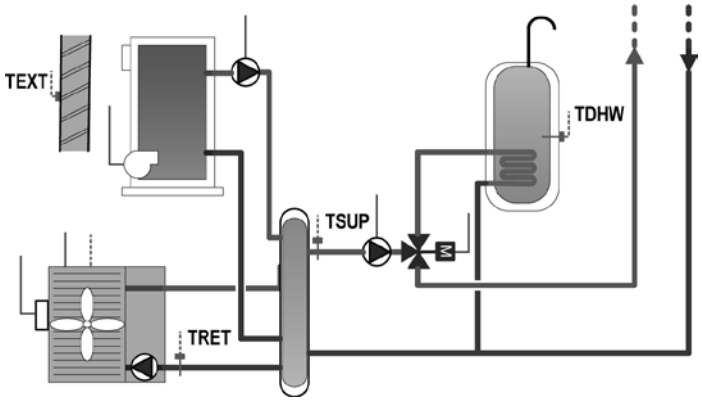


- **Example**
  Bi-Valent System with DHW.
  Hydraulic separator or buffer tank.
  DHW controlled by separate pump.

  CONF=3 Bi-Valent Parallel system
  P1=2 DHW pump

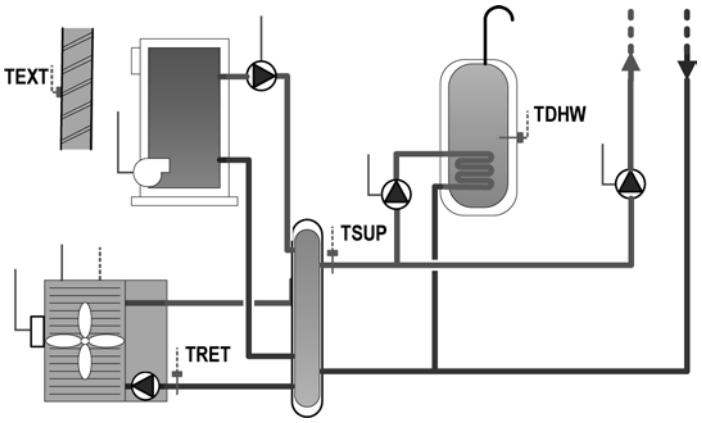




Все каталоги и инструкции здесь: https://splitsystema48.ru/instrukcii-po-ekspluatacii-kondicionerov.html

## 4.1.11. Bi-Valent System - Parallel Operation - Mixing Loop (CONF 4)

- **Summary**
  This is a bivalent system where the boiler is configured in parallel with the heat pump. A hydraulic separator or buffer tank has to be used to ensure proper hydraulic balancing. This system is recommended for retrofit (upgrade) applications where an existing gas/oil boiler will be retained to provide the full heating requirements on the coldest days of the year.

- **Important Parameter Settings**
  CONF = 4
  P4 = heating curve according to building and system characteristics.
  DHW tank control is not possible with this system.
  It is also recommended to review all parameter settings, and make modifications as required by the installation.

- **Example**
  Bi-Valent System with DHW & mixed heating loop.
  Hydraulic separator or buffer tank.

  CONF=4 Bi-valent Parallel system

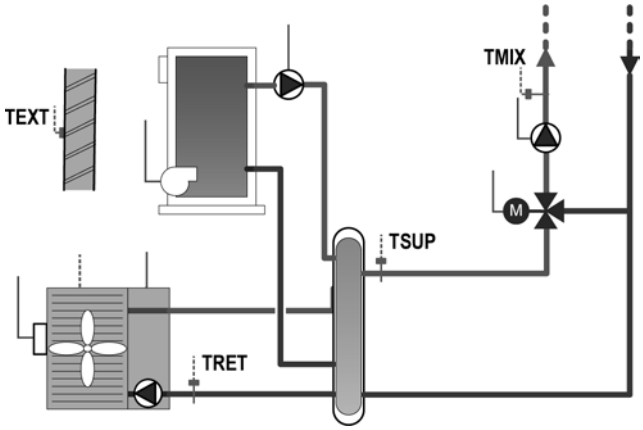


## 4.1.12. Bi-Valent System - Serial Operation (CONF 5)

- **Summary**
  This is a bivalent system where the boiler is configured in series with the heat pump. A hydraulic separator or buffer tank has to be used to ensure proper hydraulic balancing. This system is also used for retrofit (upgrade) applications, but operates like the mono-energetic system using the gas/oil boiler, similarly to the electric heater, in series with the heat-pump. The boiler only needs to provide the additional peak load capacity

- **Important Parameter Settings**
  CONF = 5
  P1 = 0,1,2 according to DHW system type.
  P4 = heating curve according to building and system characteristics.
  It is also recommended to review all parameter settings, and make modifications as required by the installation.

- **Example**
  Bi-Valent System with DHW.
  Serial operation with bypass/mixing valve.
  DHW controlled by diverting valve
  Hydraulic separator or buffer tank.

  CONF=5 Bi-valent Parallel system
  P1=1 DHW valve

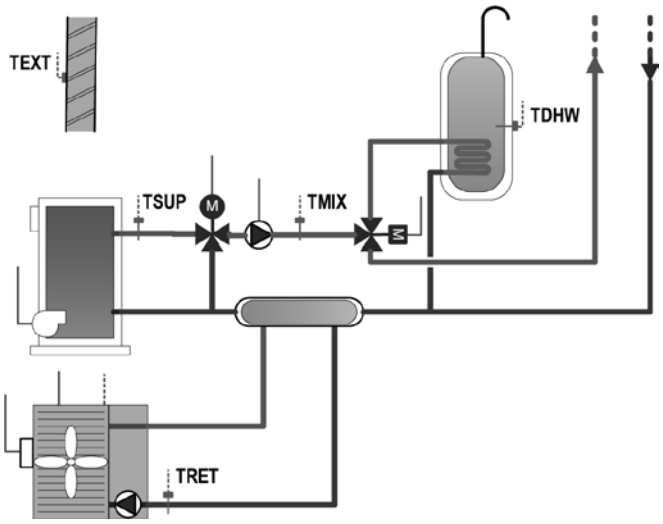




Все каталоги и инструкции здесь: https://splitsystema48.ru/instrukcii-po-ekspluatacii-kondicionerov.html

- **Example**
  Bi-Valent System with DHW.
  Serial operation with bypass/mixing valve.
  DHW controlled by separate pump.
  Hydraulic separator or buffer tank.

  CONF=5 Bi-Valent Parallel system
  P1=2 DHW pump

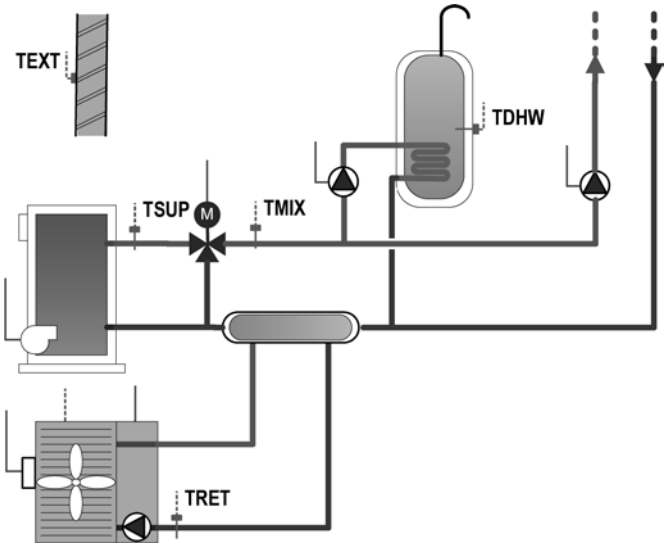


## 4.2. SUPPLY SETPOINT CALCULATION

- **Calculation**

The System Controller uses the “zone of greatest demand” strategy for calculating the supply water temperature required from the Heat Pump (and/or 3-stage electric heater or boiler).

The system controller recognises three “zones”:
Zone 1: The normal heating loop controlled directly by the System Controller (direct or mixed depending on the system configuration).
Zone 2: The mixed heating loop controlled by the Extension Controller.
DHW zone: The DHW storage tank loading loop.

Each zone can generate a demand to the heat pump (and/or boiler/electric heater) for a particular supply water temperature
S1: The supply setpoint water temperature required by the “zone 1” heating loop.
S2: The supply setpoint water temperature required by the “zone 2” heating loop.
SDHW: The supply setpoint water temperature required by the DHW loop.

The actual supply setpoint used at any time is the maximum of the three zone supply setpoints.

SSUP = maximum (S1, S2, SDHW)

It is the objective of the system controller to manage the Heat Pump, 3-stage electric heater and boiler appropriately to control the supply water temperature (TSUP) to this setpoint (SSUP).

- **Illustration**
  The diagram below shows the three possible “zones” and illustrates the required water temperatures (S1, S2, SDHW) for each zone, and the resulting overall supply setpoint (SSUP).





Все каталоги и инструкции здесь: https://splitsystema48.ru/instrukcii-po-ekspluatacii-kondicionerov.html

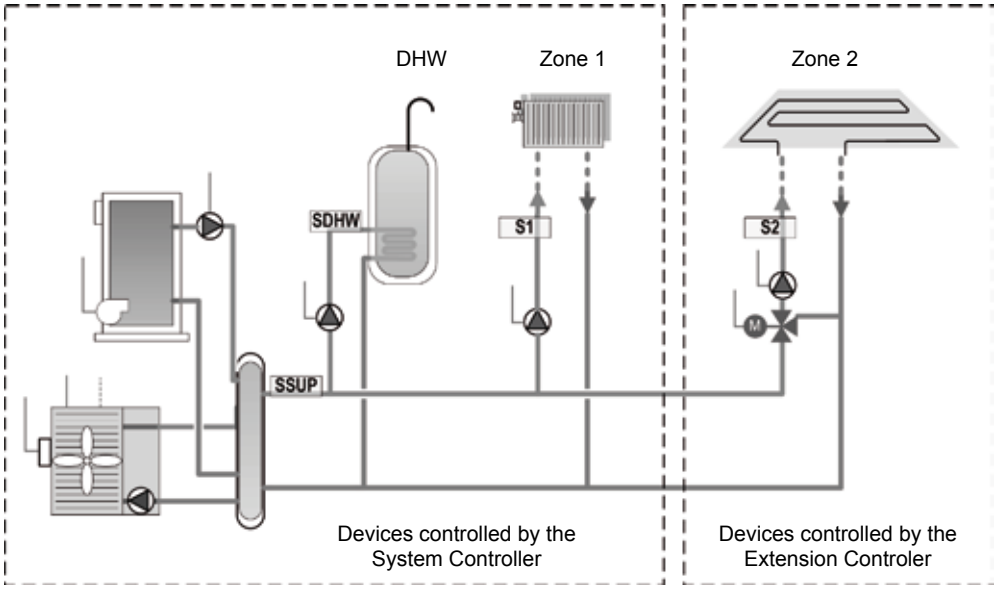


- **Example**

  Heating zone 1 requires 50°C (calculated from OTC heating curve)
  Heating zone 2 requires 35°C (calculated by extension controller)
  DHW loading not required

  S1 = 50°C, S2 = 35°C, SDHW = 0°C
  Therefore SSUP = maximum of (50°C, 35°C, 0°C) = 50°C

  Note that the extension controller will then control the mixing circuit to achieve comfort conditions in zone 2.

# 4.3. HEATING CONTROL FUNCTIONS

## 4.3.1. Heating Circuit – General

- **Function**

  The heating circuit is usually always enabled which means the controller will always try to provide the correct water temperature to maintain the desired comfort conditions based on the heating characteristic curve as described below.

  However, the heating circuit is disabled when:
  DHW storage tank loading is required.
  or the summer switch-off condition is active
  or the no-load condition is active

## 4.3.2. Heating Characteristic Curve (OTC Control)

- **Function**

  The System Controller is an Outside Temperature Compensated (OTC) control system that uses the outside temperature, the room temperature setpoint, and optionally the room temperature, to calculate the correct supply water temperature for the system in order to maintain comfort conditions. A prerequisite for constant room comfort conditions is the correct setting of the heating characteristic curve as well as the correct design of the heating system by the heating installer according to heat demand calculations.



Все каталоги и инструкции здесь: https://splitsystema48.ru/instrukcii-po-ekspluatacii-kondicionerov.html

The heating curve should be selected according to the local climatic conditions, building structure and type of heating distribution system. The gradient of the heating curve describes the relation between the change in the supply temperature and the change in outside temperature. In the case of large heating surfaces (and therefore low supply temperatures) like floor heating systems the heating characteristic curve is less steep compared to smaller heating surfaces (eg radiators). Typically a well-insulated, modern building with underfloor heating would use a heating curve value of 0.4-0.6 and one with radiator heating a value of around 1.6.

- **Parameter Settings**

P4 OTC Heating Curve Gradient (default value 1.1)
The graph shows the supply water temperature setpoint, when the room setpoint=20°C and no room compensation is applied.

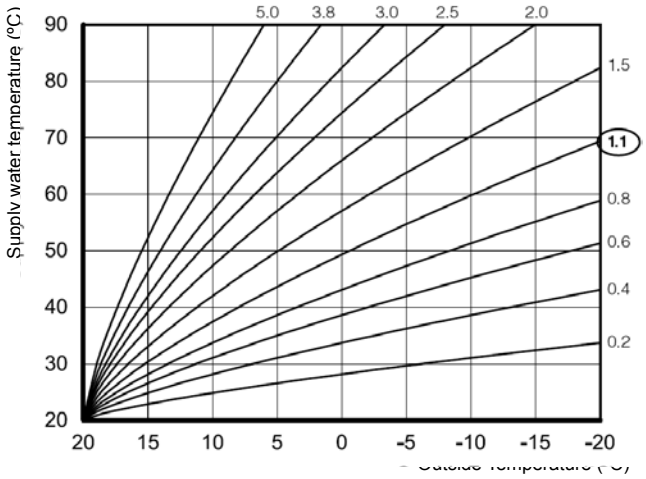


- **Example**

P4 = 1.1,
TEXT (outside temperature) = 0°C,
SR1 (room setpoint) = 20°C
=> From graph, S1 (supply setpoint) = 49°C

#### 4.3.2.1. Room Setpoint Parallel Shift

- **Function**

At different times of the day, according to the time programme in the Room Unit, the room temperature setpoint will cause a parallel shift of the heating curve. The change in supply setpoint due to the room setpoint is dependant on the actual value of the outside temperature and the selected heating curve.

- **Example**

P4 = 1.1
TEXT (outside temperature) = 0°C
SR1 (room setpoint) = 18°C
=> S1 (supply setpoint) = 45°C
In this case, for a 2K change in room setpoint, the supply setpoint is changed by 4 K

| | NOTE |
|---|---|
| - | *The room setpoint value is sent from the Room Unit to the System Controller by a wireless signal. There can be a short delay in response between a room setpoint change and the system controller changing the supply setpoint.* |


Все каталоги и инструкции здесь: https://splitsystema48.ru/instrukcii-po-ekspluatacii-kondicionerov.html

#### 4.3.2.2. Room Temperature Compensation

- **Function**
  If room compensation is enabled, the calculated OTC supply setpoint is adjusted based on the difference between room temperature and room setpoint in order to reduce the room error. The amount of room influence can be adjusted by the room temperature compensation factor setting.

- **Parameter Setting**
  P7 Room Compensation Factor (default value 2)

  To increase or decrease the amount of room compensation, adjust the room compensation factor. A higher value will give more priority to the room temperature error, and a lower value will mean the controller follows more closely the selected heating curve.

- **Example**
  P7 = 2,
  SR1 (room setpoint) = 20,
  TR1 (room temperature) = 23
  => S1 (supply setpoint) reduced by 2 * (23 – 20) = 6K

- **Enable/Disable**
  To disable room compensation completely, set P7=0. It is also recommended to change the setting 8:Su=1 on the room unit. This will prevent the room temperature being transmitted to the System Controller and the room temperature will not be displayed to the end-user on the Room Unit. Please refer to the System MMI Pack Installation and Operation Manual for further details.

| | ***NOTE*** |
|---|---|
| | - *Room compensation should not be used when the room unit is located in a position unrepresentative of the desired temperature in the living spaces, for example in a warm cupboard*<br>- *The room setpoint and room temperature values are sent from the Room Unit to the System Controller by a wireless signal. There can be a short delay in response between a room setpoint or temperature change and the system controller changing the supply setpoint.* |

### 4.3.3. Heating Circuit Minimum/Maximum Temperature Limits

- **Function**
  The calculated supply water temperature setpoint is limited between the minimum supply temperature and the maximum supply temperature settings. The maximum temperature limit can be used for example to prevent high temperatures going to floor heating systems. The minimum temperature limit can be used when it is desired to keep a minimum level of heating in the heating circuit.

- **Parameter Setting**
  P5 Minimum Supply Temperature (default 15°C)
  P6 Maximum Supply Temperature (default 55°C)

- **Configuration Specific**
  CONF 1: P6 can be set up to a maximum value of 55°C
  CONF 2: P6 can be set up to a maximum value of 65°C
  CONF 3,4,5: P6 can be set up to a maximum value of 90°C



Все каталоги и инструкции здесь: https://splitsystema48.ru/instrukcii-po-ekspluatacii-kondicionerov.html

### 4.3.4. Heating Circuit (Secondary) Pump

- **Function**
  When the heating circuit is enabled, the secondary pump will be switched on. When the heating circuit is disabled, the secondary pump is switched off after a pump overrun time.

  If the screed function is activated or system frost protection is active, the secondary pump continues to run.

  If the system uses a DHW diverting valve and DHW storage tank loading is active, then the secondary pump continues to run, since it is also used for the DHW loading.

- **Parameter Settings**
  P2 Secondary Pump Selection (default 0 – no secondary pump)
  P3 Pump Overrun Time (default 2 min)

- **Configuration Specific**
  CONF 1,2: If a buffer tank or hydraulic separator is used between the Heat Pump and the heating circuit, it is necessary to set parameter P2=1 to enable control of the secondary pump.
  CONF 3,4,5: Secondary pump control is always enabled.
  CONF 4,5: If the mixed circuit maximum temperature limit is active, then the secondary pump is switched off.

### 4.3.5. Automatic No-Load Function

- **Function**
  When the calculated supply temperature setpoint (from OTC heating curve + room setpoint shift + room compensation shift) is less than the room temperature, then the heating circuit can be switched off to save energy. A switching differential of +/- 1K is applied.

- **Algorithm**
  OTC supply setpoint < room temperature (TR1) – 1K => No-Load condition is active
  OTC supply setpoint > room temperature (TR1) + 1K => No-Load condition is not active.

  When the No-Load condition is active, the heating circuit is switched off.

- **Parameter Settings**
  P30 No-Load Function enable/disable (default 1)
  = 0 disabled
  = 1 enabled

## 4.4. DHW CONTROL FUNCTIONS

### 4.4.1. DHW Storage Tank Loading

- **Configuration Specific**
  The DHW control function is available for configurations CONF1,2,3, and 5.

- **Enable/Disable**
  To enable DHW control, parameter P1 should be set according to whether the system uses a diverting valve or separate pump for the DHW circuit.


Все каталоги и инструкции здесь: https://splitsystema48.ru/instrukcii-po-ekspluatacii-kondicionerov.html

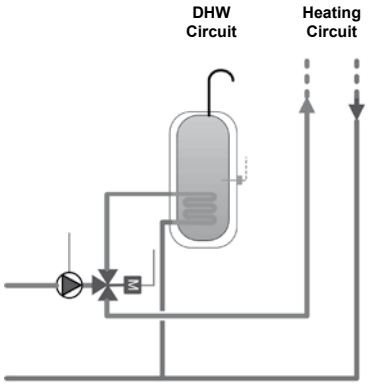


DHW diverting valve system

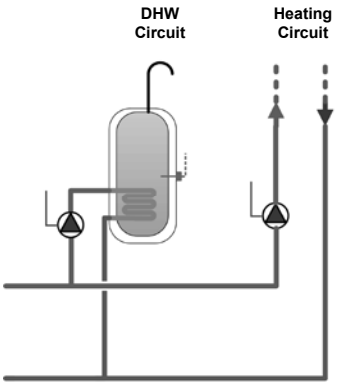


DHW pumped system

- **Function**

The DHW function has priority over the Heating Circuit, which means that when the DHW storage tank is being loaded, the heating circuit will be switched off.

The DHW function will be blocked (temporarily disabled) when the Tariff/Timer input is configured for DHW and the input is open circuit (or alternatively short circuit as defined by parameter – see “DHW Time Program”).

- **Parameter Settings**

P1 System DHW Choice (default 0)
- P1=0 No DHW function
- P1=1 System with DHW diverting valve
- P1=2 System with DHW pump

## 4.4.2. DHW Control

- **Function**

When DHW control is enabled, the system controller heats the DHW tank temperature to the DHW setpoint (P10). When the DHW temperature drops below the DHW setpoint minus the DHW differential (P11), this function switches on the DHW Pump or opens the DHW valve, and sets a supply setpoint equal to DHW setpoint + DHW supply offset (P12). The DHW loading is complete when the DHW temperature rises above the DHW setpoint.

Supply Setpoint for DHW loading = DHW setpoint + DHW Supply Offset (P12)
DSET = DHW setpoint (P10)
SDHW = Supply Setpoint for DHW loading.
TDHW = DHW tank temperature

- **Diagram**

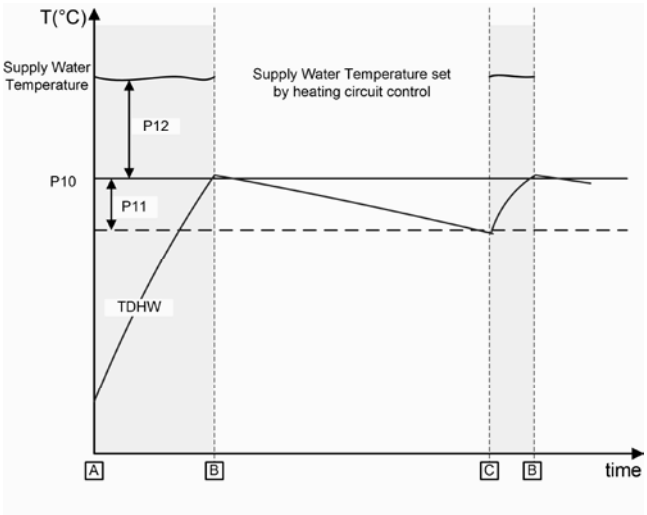


A DHW loading starts (power-on or DHW timer signal)
Supply water temperature set to P10+P12(*)

B DHW tank temperature (TDHW) rises above P10
DHW loading stops
Supply water temperature is determined by heating circuit requirements.

C DHW tank temperature (TDHW) falls below P10 - P11
DHW loading starts
Supply water temperature set to valve P10+P12(*)

| | NOTE |
|---|---|
| - | *The Heat Pump outlet temperature setpoint will be equal to the Supply Water Temperature Setpoint + P31 (Heat Pump supply offset) to account for pipe losses. The Heat Pump outlet temperature setpoint is always limited to 55º C or 50º C depending on the outside temperature.* |



Все каталоги и инструкции здесь: https://splitsystema48.ru/instrukcii-po-ekspluatacii-kondicionerov.html

- **Parameter Settings**

P10 DHW setpoint (default 45°C)
P11 DHW differential (default 5K)
P12 DHW supply offset (default 10K)

- **Configuration Specific**

CONF 1,2: Heat Pump heats the DHW storage tank directly. If the storage tank also has an internal DHW electric heater this can also be used if necessary.
CONF 2: The 3-stage electric heater cannot be used for DHW loading. When DHW loading starts, the 3-stage electric heater is switched off.
CONF 3,5: If the Heat Pump is not able to reach the DHW supply setpoint by itself, the boiler may also be used to raise the temperature of the DHW tank (see “Using the Boiler for DHW loading”).

- **Parameter Notes**

P10: DHW setpoint
CONF 1,2: If there is no internal DHW electric heater, setting the DHW setpoint higher than 45°C may result in very long DHW loading times, and the desired temperature may not be reached. This is because the maximum outlet temperature from the Heat Pump is normally 55°C, and at low outdoor temperatures 50°C.
CONF 3,5: The DHW setpoint may be set higher since the boiler will also be used to heat the DHW storage tank.

P11: DHW differential
A small DHW differential will increase the frequency of the DHW loading periods while making them shorter. A large DHW differential will reduce the frequency of the DHW loading periods, while making each period longer, and will cause larger swings in DHW temperatures.

P12: DHW supply offset
CONF 1,2: setting a value higher than 10K will not affect the DHW loading period since the maximum outlet temperature from the Heat Pump is 55°C.
CONF 3,5: setting a value higher than 10K will allow faster DHW loading times since the boiler can be used.



## 4.4.3. Maximum DHW Loading Time

- **Function**

In case there is a continuous high demand for DHW over a very long period, or the DHW setpoint is set too high, the Heat Pump may not be able to reach the desired temperature. In this case, to ensure that heat is provided in the living space (heating circuit), the DHW loading is stopped after a preset time (parameter P27) and the system controller returns to satisfy the demand from the heating circuit.

- **Diagram**

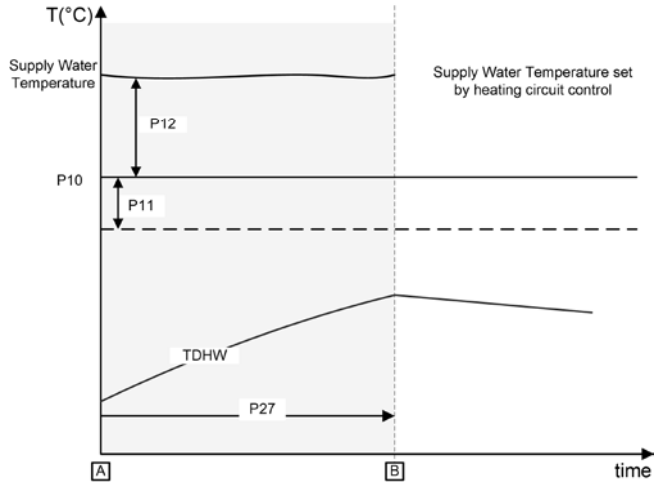


A DHW loading starts (power-on or DHW timer signal)
Supply water temperature set to P10+P12(*)

B DHW setpoint not reached after time P27
DHW loading stopped



Все каталоги и инструкции здесь: https://splitsystema48.ru/instrukcii-po-ekspluatacii-kondicionerov.html

- **Parameter Setting**

P27 Maximum allowed DHW loading time (default 1.5hr)

| | NOTE |
|---|---|
| - | *After the DHW loading has stopped, the DHW electric heater (if connected) will continue to be enabled until the DHW setpoint temperature is reached* |

- **Automatic Reset**

Only after 24hrs, or at the next time clock enable period (if an external DHW time clock is used), the system controller will use the Heat Pump once again to load the DHW tank.

## 4.4.4. DHW Electric Heater

### 4.4.4.1. DHW Electric Heater

**Configuration Specific** This function is only available in configurations 1 and 2 (CONF 1,2).

**Function** The DHW tank may have an internal electric heater for situations when the heatpump is unable to fully load the DHW tank
The Heat Pump is not able to heat the DHW tank to high temperatures by itself because its output is limited. The maximum temperature to which the heat pump can raise the DHW tank is defined as :
DSET_HP = the maximum temperature to which the heat pump can heat the DHW tank
= Heat Pump maximum supply temperature (EP29 or EP33) – EP39
IF DSET (P10) is set less than this value then the DHW electric heater operates as in situation 1 below.
IF DSET (P10) is greater than this value then the DHW electric heater operates as in situation 2 below... .

**Situation 1: P10 < DSET_HP** If, after the DHW electric heater waiting time, the DHW temperature has not reached the DHW setpoint, the DHW electrical heater enable output is switched on. The electrical heater operates on its own thermostat to raise the temperature of the DHW tank.

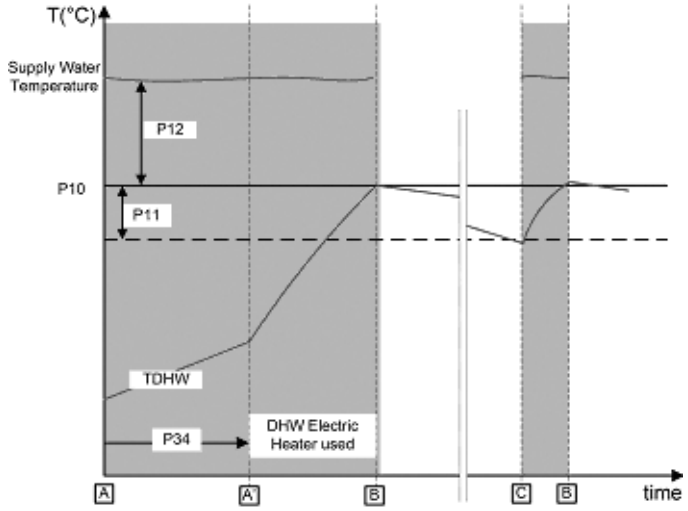


A' After the waiting time P34, the DHW Electric Heater is enabled



Все каталоги и инструкции здесь: https://splitsystema48.ru/instrukcii-po-ekspluatacii-kondicionerov.html

**Situation 2: P10 > DSET_HP** The Heat Pump is used to heat the DHW tank to the temperature DSET_HP. Then the DHW electric heater is switched on to heat the DHW tank to the temperature DSET. With slow reductions in DHW temperature, the DHW electric heater is switched on again when the DHW temperature falls below DSET minus P11. With a large reductions in DHW temperature (for example, a large draw-off from the tank, or after a period of DHW blocking), when the DHW temperature falls below DSET_HP minus P11, the heat pump is again used to heat the DHW tank to DSET_HP before the DHW electric heater is switched on again.

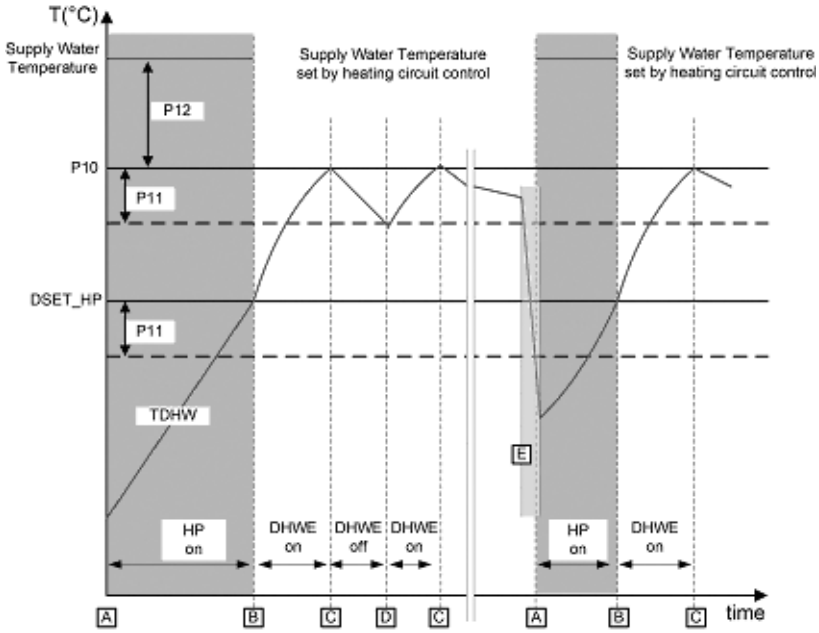


A DHW loading starts. Heat Pump is on, DHW E-heater is off.
B Heat Pump is switched off, DHW E-heater is switched on.
C Target DHW setpoint is reached. DHW E-heater is switched off
D DHW E-heater is switched on.
E A large draw-off from the DHW tank or DHW blocking period.

**Parameter Setting:** P10 DHW setpoint
P34 DHW Electric Heater Waiting Time (default 45 min)
EP39 DHW offset for maximum heat pump supply temperature (default 7K)
Engineering Parameters (EP) are only available for service engineers.

**Note** The electric heater should have its own thermostat set to a higher value than the DHW setpoint of the System Controller. Please take care about the type of DHW storage tank fitted and the position of the electric heater.

### 4.4.4.2. Using the Boiler for DHW loading

**Configuration Specific** Applies only to configurations CONF 3,5

**Function** The boiler may also be used to raise the temperature of the DHW tank if the Heat Pump is not able to reach the DHW supply setpoint by itself. The boiler will only start after a time delay defined by parameter P19 (waiting time for boiler) in order to allow the Heat Pump time to satisfy the DHW loading demand by itself.
Exception: If the installer parameter P10 (DSET) is higher than DSET_HP, this means the boiler is always needed to heat the DHW tank. In this case the boiler waiting time (P19) does not apply.
DSET_HP = the maximum temperature to which the heat pump can heat the DHW tank
= Heat Pump maximum supply temperature (EP29 or EP33) – EP39

**Parameter Setting** P10 DHW setpoint
P19 Waiting Time for Boiler (default 30 min)
EP39 DHW offset for maximum heat pump supply temperature (default 7K)
Engineering Parameters (EP) are only available for service engineers.


Все каталоги и инструкции здесь: https://splitsystema48.ru/instrukcii-po-ekspluatacii-kondicionerov.html

### 4.4.5. Using the Boiler for DHW loading

- **Configuration Specific**

Applies only to configurations CONF 3,5

- **Function**

The boiler may also be used to raise the temperature of the DHW tank if the Heat Pump is not able to reach the DHW supply setpoint by itself. The boiler will only start after a time delay defined by parameter P19 (waiting time for boiler) in order to allow the Heat Pump time to satisfy the DHW loading demand by itself.

- **Parameter Setting**

P19 Waiting Time for Boiler (default 30 min)

### 4.4.6. Response of the Heat pump to a DHW demand

- **Function**

Since the heat pump only reads the control signal (mA) once every 20 minutes there can be a delay before the system responds to the DHW request. In order to improve this response time, the System Controller uses a feature of the heat pump that when the control signal is set to its highest value, it responds immediately. So if the supply setpoint has to be increased due to a DHW demand, then the supply setpoint is set to the parameter EP29 (Heat Pump maximum supply temperature) for a certain time. This time is the Heat Pump Max Time High Setpoint (EP35). When this time period expires, the Supply Setpoint is set to the normal calculated DHW supply setpoint.

- **Parameter Setting**

EP35 Heat Pump Max Time High Setpoint (default 180sec)

| | ***NOTE*** |
|---|---|
| - | *Engineering Parameters (EP) are only available for service engineers* |

### 4.4.7. DHW Time Program

- **Function**

A DHW time program is not provided inside the controller. An external timer can be used by itself or together with a tariff-switch device. For example, with an external timer it is possible to block DHW loading during daytime periods.
It is possible to use

1. only a external timer. Operates according to EP24 setting.
2. an external timer in series with a tariff-switch device. In this case:
   if EP24=3 both the external timer and the tariff-switch contacts must be closed to allow DHW loading
   if EP24=4 either of the external timer or the tariff-switch contacts can be open to allow DHW loading.
3. an external timer in parallel with a tariff-switch device. In this case:
   if EP24=3 either of the external timer or the tariff-switch contacts can be open to allow DHW loading
   if EP24=4 both the external timer and the tariff-switch contacts must be closed to allow DHW loading.
4. only a tariff switch device. Operates according to EP24 setting.

Depending on the setting of the configuration of tariff/timer input parameter (EP24), DHW loading can be blocked according to the status of the input (open or closed).



Все каталоги и инструкции здесь: https://splitsystema48.ru/instrukcii-po-ekspluatacii-kondicionerov.html

- **Diagram**

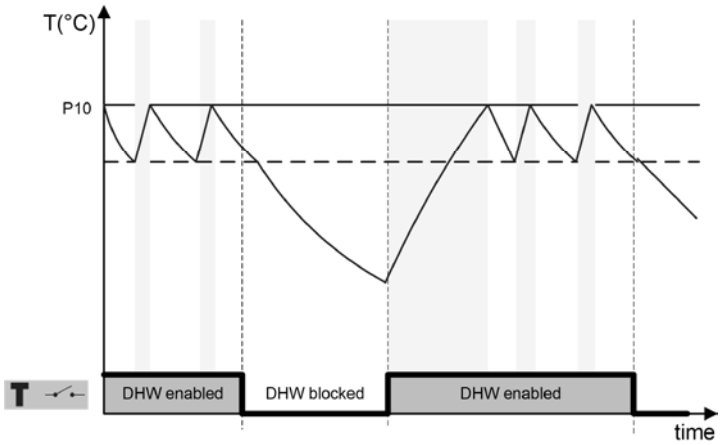


- **Parameter Setting**

P24 Configuration of Tariff/Timer Input (default 4)

| P24 | Open Circuit on terminals 10/11 | Closed Circuit on terminals 10/11 |
|---|---|---|
| 0 | Tariff/Timer input is ignored | |
| 1 | Tariff/Timer input is used for Heat Pump blocking | |
| 2 | Tariff/Timer input is used for Heat Pump blocking | |
| 3 | DHW is blocked | DHW is enabled |
| 4 | DHW is enabled | DHW is blocked |

4

| | NOTE |
|---|---|
| - *The tariff/timer input can be used for DHW time switching OR Heat Pump blocking, not both* | |

# 4.5. HEATPUMP CONTROL FUNCTIONS

## 4.5.1. Heatpump Control

- **Function**

The System Controller normally switches the heat pump on when there is a demand from the heating or the DHW circuit. The Heat Pump on/off output of the System Controller is connected to the Remote on/off input of the heat pump.

The heat pump will start the water circulation pump (primary pump) when the remote on/off input is switched on, and enable its internal control of the compressor and heat pump system components.

The System Controller switches the heat pump off when :
the outdoor temperature (TEXT) < -20°C (adjustable, see “Heat Pump operating limits”)
or, the return water temperature > 60°C (adjustable, see “Heat Pump Return High Limit”)
or, heat pump blocking is active (tariff/timer input)

| | NOTE |
|---|---|
| - *The compressor will not always run when the remote on/off signal is switched on by the System Controller. The Heat Pump has an internal control function “thermo-off” which will switch the compressor off when the target water temperature is exceeded. The compressor will also be switched off when there is an internal heat pump fault.* | |



Все каталоги и инструкции здесь: https://splitsystema48.ru/instrukcii-po-ekspluatacii-kondicionerov.html

## 4.5.2. Heatpump Setting Control Signal

- **Function**

When there is a demand for heating or DHW, the System Controller will send to the heat pump a signal for the required Heat Pump outlet temperature. The System controller uses the 4-20mA connection to represent the outlet water temperature setpoint. The heatpump will modulate the appliance according to its own control strategy to achieve the correct output water temperature.

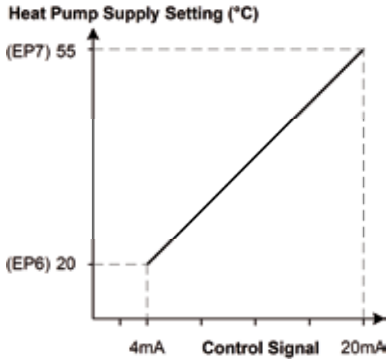


A conversion table from water temperature setting to mA signal is provided at the end of this guide.

- **Calculation**

Heat Pump Supply Setting = SSUP (supply setpoint) + P31 (Heat Pump Sensor Offset)

The Heat Pump Supply setting is always constrained within the maximum and minimum heat pump supply temperatures. These limits depend on the current outside temperature; see “Heat Pump Operating Limits”. Heat Pump Sensor Offset is explained in the next section.

- **Parameter Settings**

EP6 Heat Pump Supply Setpoint at 4mA (default 20°C)
EP7 Heat Pump Supply Setpoint at 20mA (default 55°C)

These parameters should only be changed with the approval of the manufacturer.

| | ***NOTE*** |
|---|---|
| - | *Engineering Parameters (EP) are only available for service engineers.* |

## 4.5.3. Heatpump Sensor Offset

- **Function**

In practice, there may be a difference between the heat pump outlet temperature (measured by the Heat Pump) and the supply temperature (measured by the system controller). This can be caused by:

1. Different measuring position. The Heat Pump is outside and some loss of heat is possible between the heat pump and the supply pipes inside the house.
2. Different types of sensor. The Heat Pump measures the outlet temperature using an immersion-type sensor directly in the water flow after the condenser. The System Controller uses a strap-on type sensor, which depending on the ambient conditions, will typically measure a lower temperature than an immersion-type in the same location.

This difference needs to be taken into account for optimum control performance, and parameter P31 is provided so this can be adjusted according to the installation.

- **Parameter Settings**

P31 Heat Pump Sensor Offset (default 3K)



Все каталоги и инструкции здесь: https://splitsystema48.ru/instrukcii-po-ekspluatacii-kondicionerov.html

| | NOTE |
|---|---|
| - *It is important to minimise this effect as much as possible during installation. The following precautions should be taken*<br>- *1. Fully insulate the supply and return pipes.*<br>- *2. Ensure that the supply temperature sensor is tightly strapped-on to the pipe with the metal clip provided.*<br>- *The metal clip should be used directly around the sensor element itself (since it itself improves the heat transfer) and then insulation should be placed around the sensor and fixed securely in place.* | |

## 4.5.4. Heatpump Maximum Return High Limit

- **Function**

The Heat Pump itself ensures good control of the outlet water temperature, and switches off the compressor when the return water temperature gets too high. However, in some circumstances with bi-valent systems, the boiler may be operating at high supply and return temperatures. If the return water temperature to the Heat Pump rises above 65°C it will generate a system fault (“excessively high water temperature”). To prevent this happening, the System Controller will directly switch off the heat pump if the return temperature rises above a set limit.

Return water temperature (TRET) > EP13 + 0.5K Heat Pump is switched off
Return water temperature (TRET) < EP13 - 0.5K Heat Pump may be switched on.

- **Parameter Settings**

EP13 Heat Pump Maximum Return Temperature (default 60°C)
This value should not normally need to be changed.

| | NOTE |
|---|---|
| - *Engineering Parameters (EP) are only available for service engineers.* | |

4

## 4.5.5. Heatpump Operating Limits

- **Function**

Heat Pump operation is only possible within certain temperature ranges as defined below. Parameters are provided in order to adjust the working area if required to do so by Hitachi.
The Heat Pump water temperature setting sent by the System Controller is always constrained to lie between the maximum and minimum limits defined by the operating limits.

If the outdoor temperature is below -20°C (P14 in Config 3,4,5 / EP14 in Config 1,2), the heat pump will always be switched off.

- **Heat Pump Working Area**

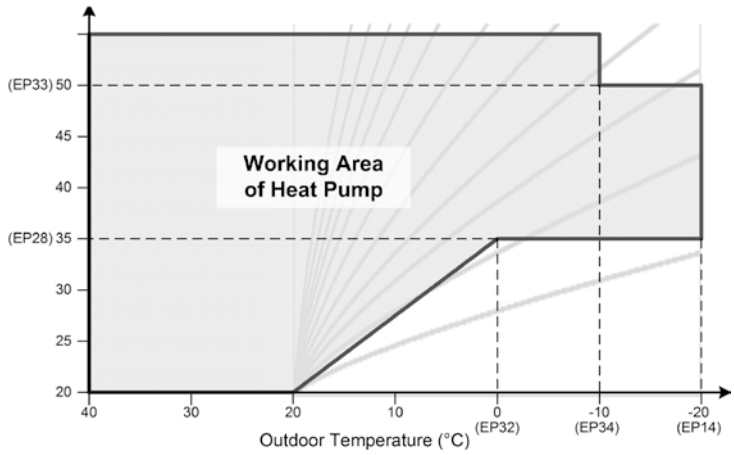




Все каталоги и инструкции здесь: https://splitsystema48.ru/instrukcii-po-ekspluatacii-kondicionerov.html

- **Parameter Settings**

P14 / EP14 Heat Pump minimum outdoor temperature (default -20°C)
EP28 Heat Pump minimum supply temperature below outdoor temperature of EP32 (default 35°C)
EP29 Heat Pump maximum supply temperature above outdoor temperature of EP34 (default 55°C)
EP32 Heat Pump minimum supply inflexion point (default 0°C)
EP33 Heat Pump maximum supply temperature below outdoor temperature of EP34 (default 50°C)

EP34 Heat Pump maximum supply changing point (default -10°C)

| | NOTE |
|---|---|
| - | *Engineering Parameters (EP) are only available for service engineers.* |

## 4.5.6. Tariff Switch (Heat Pump blocking) Input

- **Configuration Specific**

The tariff switch input (heat pump blocking) is only allowed for Bi-Valent systems. For mono-valent or mono-energetic systems the heat pump can never be blocked by this input.

- **Function**

This function allows an external tariff-switch device to switch off the heat pump during times of peak electricity demand. When the controller is working in bi-valent mode, the boiler will be switched on to provide the necessary heating.

- **Parameter Setting**

P24 Configuration of Tariff/Timer Input (default 4)

| P24 | Open Circuit on terminals 10/11 | Closed Circuit on terminals 10/11 |
|---|---|---|
| 0 | Tariff/Timer input is ignored | |
| 1 | Heat Pump is enabled | Heat Pump is blocked |
| 2 | Heat Pump is blocked | Heat Pump is enabled |
| 3 | Tariff/Timer input is used for DHW time clock | |
| 4 | Tariff/Timer input is used for DWH time clock | |

| | NOTE |
|---|---|
| - | *The tariff/timer input can be used for DHW time switching OR Heat Pump blocking, not both.* |



Все каталоги и инструкции здесь: https://splitsystema48.ru/instrukcii-po-ekspluatacii-kondicionerov.html

# 4.6. BOILER CONTROL FUNCTIONS

## 4.6.1. Boiler Control

- **Configuration Specific**
  Boiler control is available only in configurations 3,4,5 (CONF3, CONF 4, CONF5)

- **Function**
  The boiler control decides whether to switch the boiler on or off based on a proportional plus integral action (P+I) control algorithm and the difference between the Boiler Setpoint and the Supply Water Temperature (TSUP).
  The boiler will only be used when
  - the outdoor temperature is below the bivalence point (maximum outdoor temperature for boiler operation)
  - or the boiler has been manually released (after a heat pump fault).

  In addition the Supply-Return Difference Check is performed before allowing the boiler to switch on, unless the heat pump is switched off or has an internal fault.

- **Special Note**
  Parameter P33 should be set = OFF in configurations 3, 4, and 5. P33 relates to a function “Return Limit Offset” for electric heater control. It is not recommended to use this function for boiler control. If P33 is not set to OFF, then the boiler will be prevented from starting until this special condition is met.

| | ***NOTE*** |
|---|---|
| - | *The boiler is always enabled when there is DHW loading required, or when the Heat Pump is blocked by the Tariff/Timer input.* |

4

- **Boiler Setpoint & Supply Setpoint Control Offset**
  If the heat pump is switched off, or has an internal fault, the Boiler Setpoint = Supply Setpoint (SSUP)

  If the heat pump is switched on, the water setpoint used for the boiler control depends on the value of the Supply Setpoint. When the supply setpoint is low the boiler will only be used if the actual supply temperature is much lower than the desired setpoint. To achieve this, the boiler setpoint is offset lower than the supply setpoint. When the supply setpoint is higher than can be achieved by the heat pump alone, the boiler setpoint is equal to the supply setpoint. This function is intended to help reduce the number of times the boiler is used, to emphasise energy saving operation.

  If Supply Setpoint > Heat Pump maximum supply temperature – Heat Pump Sensor Offset + 0.5K,
  then Boiler Setpoint = Supply Setpoint (SSUP)

  If Supply Setpoint < Heat Pump maximum supply temperature – Heat Pump Sensor Offset - 0.5K,
  then Boiler Setpoint = Supply Setpoint (SSUP) – Supply Setpoint Control Offset (EP31)

  The heat pump maximum supply temperature depends on the outdoor temperature and the heat pump operating limits.

- **Control Algorithm**
  The P+I algorithm calculates a “Load factor” from 0% to 100%. The boiler is switched on when the Load Factor reaches 100% and switched off when the Load Factor reaches 0%.

  Required Load Factor = PI function ( Boiler Setpoint – TSUP )

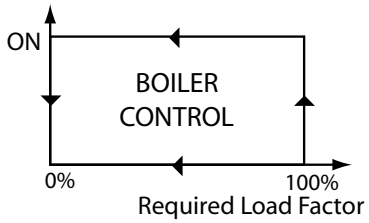




Все каталоги и инструкции здесь: https://splitsystema48.ru/instrukcii-po-ekspluatacii-kondicionerov.html

- **Parameter Settings**

EP2 Integral Factor Required Load - Boiler/Electric Heater Control (default 2.5 %/Kmin.)
EP16 Proportional Band Required Load - Boiler/Electric Heater Control (default 6 K/100%)

EP31 Supply Setpoint Control Offset (default 4 K)

It is not normally recommended to change these parameters. They have been selected during laboratory tests for best performance in most situations.

| | NOTE |
|---|---|
| - *Engineering Parameters (EP) are only available for service engineers.* | |

## 4.6.2. Supply-Return Difference Check

- **Function**

This function helps prevent the boiler operating unless the heat pump is already providing heat. When the heat pump is in “thermo-off” state (compressor off) or in “defrost”, the difference between the supply temperature TSUP and return temperature TRET will be small (or negative in case of defrost) since no heating is provided. The boiler is prevented from switching on until this difference is greater than the Supply-Return Difference Limit (P32). A +/-0.5K control differential is applied.

TSUP-TRET > P32 + 0.5K Boiler is allowed to switch on.

TSUP-TRET < P32 – 0.5K Boiler is not allowed to switch on.

When the boiler starts from cold, the supply temperature can drop for a small time as the cold water in the heat exchanger is pumped into the system. This function would then cause the boiler to be switched off. In order to prevent this, this function does not operate when the boiler is switched on until a certain time has passed from the boiler starting. This delay time is defined by a parameter Boiler Delay Time (EP36).

- **Enable/Disable**

This function can be disabled by setting parameter P32=OFF.

- **Parameter Settings**

P32 Supply-Return Difference Limit (default 3K)

EP36 Boiler Delay Time (default 5min)

A high value of P32 will prevent the boiler switching on until a large temperature difference is seen by the System Controller. With a low value of P32 or with the function disabled, the boiler may start more often, for example during defrost cycles.

| | NOTE |
|---|---|
| - *This check is ignored if the Heat Pump is switched off or has a fault*<br>- *Engineering Parameters (EP) are only available for service engineers.* | |



Все каталоги и инструкции здесь: https://splitsystema48.ru/instrukcii-po-ekspluatacii-kondicionerov.html

### 4.6.3. Boiler Minimum On / Off Times

- **Function**

In order to prevent inefficient short-cycling of the boiler, this function prevents the boiler from switching on or switching off until either the *boiler minimum off time* or *boiler minimum on time,* respectively, has elapsed.

- **Parameter Settings**

P17 Boiler minimum ON time (default 2 min.)

P18 Boiler minimum OFF time (default 5 min.)

High values of minimum ON and OFF times may cause large fluctuations in water temperature and should usually be avoided.

| | ***NOTE*** |
|---|---|
| - | *If the boiler is disabled, rather than off due to normal control (load=0%), then the boiler minimum ON time does not apply* |

### 4.6.4. Boiler Waiting Time

- **Function**

It is important with bi-valent systems that the Heat pump should first try to satisfy the heating demand by itself. For this reason a boiler waiting time applies. This means that when the heatpump cannot meet the heating demand, then the boiler is switched on only after the waiting time has elapsed.
The waiting time starts:
- When the heat pump is switched on, or
- When the boiler switches off (but only also when the Supply Setpoint SSUP < heat pump maximum temperature – heat pump sensor offset).

This means that when the heatpump should normally be able to meet the heating demand on its own, the boiler waiting time applies, but when the supply setpoint is so high that the heat pump cannot meet the heating demand on its own, the waiting time does not apply.

- **Parameter Settings**

P19 Waiting Time for Boiler (default 30min.)

A higher value of P19 will reduce the number of times that the boiler is used at lower supply setpoints, but the desired supply temperature may not be reached quickly if there is a high heating load (slower response). Conversely, a lower value of P19 will increase the number of times the boiler is used at lower supply setpoints, but ensure that the desired supply temperature is reached more quickly (better response).

### 4.6.5. Maximum Outdoor Temperature for Boiler Operation

- **Function**

This function disables the boiler control when the outdoor temperature is above the boiler maximum outdoor temperature setting. Above this setting it is assumed that the heat-pump is able to deliver all the requested heat by itself and the boiler is therefore not required.





Все каталоги и инструкции здесь: https://splitsystema48.ru/instrukcii-po-ekspluatacii-kondicionerov.html

- **Parameter Setting**
  P15 Maximum Outdoor Temperature for Boiler Operation (default 0°C)

- **Enable/Disable**
  To disable this function and allow boiler operation at all outdoor temperatures, set the parameter P15=OFF.

| | NOTE |
|---|---|
| - | *The boiler is always available for DHW loading, independent of outdoor temperature.* |

# 4.7. ELECTRIC HEATER CONTROL FUNCTIONS

## 4.7.1. Electric Heater Control

- **Configuration Specific**
  Electric Heater control is available only in configuration 2 (CONF 2).

- **Function**
  When the heatpump cannot meet the heating demand the 3-stage electric heater can be switched on to raise the supply temperature up to a maximum of 65°C. The electric heater control decides whether to switch on one or more of the electric heater stages based on a proportional plus integral action (P+I) control algorithm and the difference between the Electric Heater Setpoint and the Supply Water Temperature (TSUP).
  The electric heater will only be used when
  - the outdoor temperature is below the bivalence point (maximum outdoor temperature for electric heater operation)
  - or the electric heater has been manually released (after a heat pump fault)

  In addition, two further checks are made before the electric heater is allowed to switch on. The purpose of these checks are to help ensure that the electric heater only switches on when the heat pump is working at its maximum capacity.
  1. the Supply-Return Difference Check
  2. the Electric Heater Return High Limit Check

  These checks are not carried out if the heat pump is switched off or has an internal fault.

| | NOTE |
|---|---|
| - | *The boiler is always enabled when there is DHW loading required* |

- **Electric Heater Setpoint & Supply Setpoint Control Offset**
  If the heat pump is switched off, or has an internal fault, the Electric Heater Setpoint = Supply Setpoint (SSUP)

  If the heat pump is switched on, the water setpoint used for the electric heater control depends on the value of the Supply Setpoint. When the supply setpoint is low, the electric heater will only be used if the actual supply temperature is much lower than the desired setpoint. To achieve this, the electric heater setpoint is offset lower than the supply setpoint. When the supply setpoint is higher than can be achieved by the heat pump alone, the electric heater setpoint is equal to the supply setpoint. This function is intended to help reduce the number of times the electric heater is used, to emphasise energy saving operation.



Все каталоги и инструкции здесь: https://splitsystema48.ru/instrukcii-po-ekspluatacii-kondicionerov.html

If Supply Setpoint > Heat Pump maximum supply temperature – Heat Pump Sensor Offset + 0.5K,
then Electric Heater Setpoint = Supply Setpoint (SSUP)

If Supply Setpoint < Heat Pump maximum supply temperature – Heat Pump Sensor Offset - 0.5K,
then Electric Heater Setpoint = Supply Setpoint (SSUP) – Supply Setpoint Control Offset (EP31)

The heat pump maximum supply temperature depends on the outdoor temperature and the heat pump operating limits.

- **Control Algorithm**

The P+I algorithm calculates a “Load factor” from 0% to 100%. The electric heater stages are switched on depending on the load factor

Required Load Factor = PI function ( Electric Heater Setpoint – TSUP )

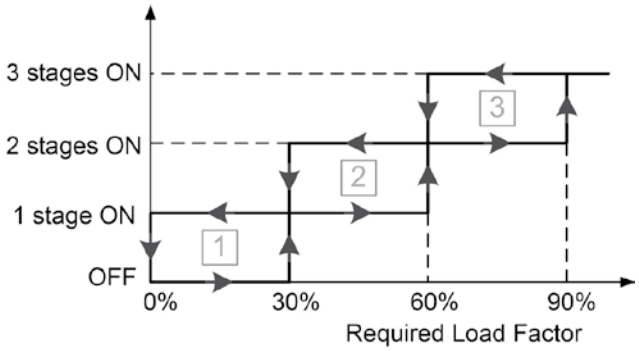


Before switching in more or fewer stages (for example between stage 1 and stage 2), the System Controller waits for a certain time to prevent too fast switching. This time is the Inter-Stage Waiting Time, parameter EP20.

4

- **Parameter Settings**

| | |
|---|---|
| EP2 | Integral Factor Required Load - Boiler/Electric Heater Control (default 2.5 %/Kmin.) |
| EP16 | Proportional Band Required Load - Boiler/Electric Heater Control (default 6 K/100%) |
| EP20 | Inter-Stage Waiting Time (default 10 sec.) |
| EP31 | supply Setpoint Control Offset (default 4 K) |

It is not normally recommended to change these parameters. They have been selected during laboratory tests for best performance in most situations. Correct positioning of the Supply Temperature Sensor close to the outlet of the Electric Heater should result in good control performance. If necessary, adjusting these parameters can correct unstable control behaviour in certain circumstances.

| | NOTE |
|---|---|
| - | *Engineering Parameters (EP) are only available for service engineers* |

## 4.7.2. Supply-Return Difference Check

- **Function**

This function helps prevent the electric heater operating unless the heat pump is already providing heat. When the heat pump is in “thermo-off” state (compressor off) or in “defrost”, the difference between the supply temperature TSUP and return temperature TRET will be small (or negative in case of defrost) since no heating is provided. The electric heater is prevented from switching on until this difference is greater than the Supply-Return Difference Limit (P32). A +/-0.5K control differential is applied.

| | |
|---|---|
| TSUP-TRET > P32 + 0.5K | Electric Heater is allowed to switch on. |
| TSUP-TRET < P32 – 0.5K | Electric Heater is not allowed to switch on. |



Все каталоги и инструкции здесь: https://splitsystema48.ru/instrukcii-po-ekspluatacii-kondicionerov.html

- **Enable/Disable**
  This function can be disabled by setting parameter P32=OFF.

- **Parameter Settings**
  P32 Supply-Return Difference Limit (default 3K)

  A high value will prevent the electric heater switching on until a large temperature difference is seen by the System Controller. With a low value or with the function disabled, the electric heater may start more often, for example during defrost cycles.

| | ***NOTE*** |
|---|---|
| - | *This check is ignored if the Heat Pump is switched off or has an internal fault.* |

## 4.7.3. Electric Heater Waiting Time

- **Function**
  It is important with mono-energetic systems that the Heat pump should first try to satisfy the heating demand by itself. For this reason an electric heater waiting time applies. This means that when the heatpump cannot meet the heating demand, then the electric heater is switched on only after the waiting time has elapsed.

  The waiting time starts:
  When the heat pump is switched on, or

  When the electric heater switches off (but only also when the Supply Setpoint SSUP < heat pump maximum temperature – heat pump sensor offset).

  This means that when the heatpump should normally be able to meet the heating demand on its own, the electric heater waiting time applies, but when the supply setpoint is so high that the heat pump cannot meet the heating demand on its own, the waiting time does not apply.

- **Parameter Settings**
  P19 Waiting Time for Electric Heater (default 30min.)

  A higher value of P19 will reduce the number of times that the electric heater is used at lower supply setpoints, but the desired supply temperature may not be reached quickly if there is a high heating load (slower response). Conversely, a lower value of P19 will increase the number of times the electric heater is used at lower supply setpoints, but ensure that the desired supply temperature is reached more quickly (better response).

## 4.7.4. Electric Heater Return High Limit Check

- **Function**
  The return high limit check is used to help ensure that the heat pump operates as much as possible even when higher supply temperatures are required, thus emphasising energy economy operation. The electric heater is disabled when the return water temperature (TRET) rises above the maximum heat pump outlet temperature minus the return limit offset (P33). A +/-0.5K control differential applies.
  TRET > Heat Pump maximum supply temperature – P33 + 0.5K  Electric Heater disabled
  TRET < Heat Pump maximum supply temperature – P33 - 0.5K  Electric Heater enabled

  Since the electric heater is switched off then the return temperature rises too high, the effect will be that in some system conditions it will not be possible to reach 65°C supply temperature. If it is important to allow 65°C operation, then the parameter can be reduced or set to OFF, but the result is that in some situations the electric heater will operate on its own and the heat pump will not be used. This will cause higher energy costs.



Все каталоги и инструкции здесь: https://splitsystema48.ru/instrukcii-po-ekspluatacii-kondicionerov.html

- **Parameter Settings**
  P33 Return Temperature Limit Offset (default OFF)

- **Special Note**
  It is highly recommended for CONF 2, that the parameter P33 is **not** left in the default OFF state.
  Recommended setting is 5K.

- **Enable/ Disable**
  This function can be disabled by setting the parameter P33=OFF.

### 4.7.5. Maximum Outdoor Temperature for Electrical Heater Operation

- **Function**
  This function disables the electric heater control when the outdoor temperature is above the electric heater maximum outdoor temperature setting. Above this setting it is assumed that the heat-pump is able to deliver all the requested heat by itself and the electric heater is therefore not required.

- **Parameter Setting**
  P15 Maximum Outdoor Temperature for Electric Heater Operation (default 0°C)

- **Enable/Disable**
  To disable this function and allow electric heater operation at all outdoor temperatures, set the parameter P15=OFF.

## 4.8. MIXING VALVE CONTROL FUNCTIONS



### 4.8.7. Mixing Valve Control

- **Configuration Specific**
  This function only applies to configuration 4 (CONF 4)

- **Function**
  When heating is required, the System Controller controls the mixing valve so that the mixed water temperature is close to the Supply Setpoint. The mixing valve position is calculated with a proportional plus integral action (P+I) control algorithm based on the difference between the Supply Setpoint and mixed water temperature (TMIX).

  Desired Mixing Valve Position = PI function ( Supply Setpoint – TRET )

  The System Controller then decides how much to open or close the mixing valve to achieve the desired position of the valve. This is dependent on the running time of the actuator used on the valve. The running time is defined as the time it takes to drive the valve from the fully closed to the fully open position. Typically this can be between 1 and 4 minutes.

- **Parameter Setting**
  P9 Mixing Valve Runtime (default 120 sec)

  EP1 Mixing Valve Integral factor (default 2.5)
  The installer should set the parameter p9 based on his selection of actuator and mixing valve.

  The value for EP1 has been chosen based on laboratory tests and it is not recommended to change it.

| | ***NOTE*** |
|---|---|
| - | *Engineering Parameters (EP) are only available for service engineers.* |



Все каталоги и инструкции здесь: https://splitsystema48.ru/instrukcii-po-ekspluatacii-kondicionerov.html

## 4.8.2. Mixing / Bypass Valve Control

- **Configuration Specific**
  This function only applies to configuration 5 (CONF 5)

- **Function**
  When the boiler is switched on, the mixing valve control is enabled and operates in the same manner as described above (Mixing Valve Control).

  When the boiler is switched off, and the difference between the supply water temperature (TSUP) and mixed supply temperature (TMIX) is small (less than EP3), the mixing valve is always closed (by-pass operation) so that the hot supply water from the heat Pump does not circulate through the boiler heat exchanger, which may cause unnecessary heat loss and reduction in system efficiency. While the water from the boiler (TSUP) is much hotter than the mixed supply temperature (TSUP), the mixing control continues to operate.

- **Parameter Setting**
  P9 Mixing Valve Runtime (default 120 sec)

  EP3 Difference Supply water temperature (default 1.5K)

  The value for EP3 has been chosen based on laboratory tests and it is not recommended to change it.

| | ***NOTE*** |
|---|---|
| - | *Engineering Parameters (EP) are only available for service engineers.* |

## 4.8.3. Mixed Heating Circuit Maximum Temperature Limit Protection

- **Configuration Specific**
  This function only applies to configurations 4 and 5 (CONF 4,5)

- **Function**
  The secondary circulation pump is switched off and the mixing valve closed when the maximum supply temperature (mixing circuit) setting is exceeded. This function helps prevent damage to floor heating systems by very high temperatures.
  TMIX > P6 Pump switched off, mixing valve closed.
  TMIX < P6 – 5K Returns to normal control.

- **Parameter Setting**
  P6 Maximum Supply Temperature

| | ***NOTE*** |
|---|---|
| - | *A fault code is displayed when the maximum limit is exceeded.* |

## 4.8.4. Mixing Valve Opening Delay

- **Configuration Specific**
  This function only applies to configurations 4 and 5 (CONF 4,5)



Все каталоги и инструкции здесь: https://splitsystema48.ru/instrukcii-po-ekspluatacii-kondicionerov.html

- **Function**

With some boilers, especially oil boilers, there is a risk of unwanted liquid condensation on the gas side of the boiler heat exchanger if the temperature falls below the water condensation temperature. This can cause reduced boiler life. In these situations, it is desirable to allow the boiler heat exchanger to warm up before the heating circuit water is circulated through the heat exchanger. This function prevents the mixing valve opening until after the boiler has been switched on for a set period of time (parameter P35).

The recommended setting will depend on the size and type of boiler. (delay time can be set between 1 and 20 minutes).

- **Parameter Setting**

P35 Mixing Valve Opening Delay Time (default OFF)

| | NOTE |
|---|---|
| - *If P35 is set to OFF, this function is disabled.* | |

# 4.9. GENERAL FUNCTIONS

## 4.9.1. System Frost Protection

- **Function**

The System Controller has a frost protection function to help prevent the heating system pipe-work freezing. When the actual outside temperature falls below the parameter (P22) , the supply water temperature will be maintained at least at the parameter value (P21). A switching differential of 1K is applied.

| | |
|---|---|
| Outside temperature (TEXT) < P22 | Supply Setpoint (SSUP) determined by heating or DHW demand but always >= P21 |
| Outside temperature (TEXT) > P22+1K | Supply Setpoint (SSUP) determined by heating or DHW demand. |

- **Parameter Settings**

P21 Frost Protection minimum Supply Temperature (default 20°C)
P22 Frost Protection Activation Temperature (default 2°C)

- **Enable/ Disable**

To disable the system frost protection function, set P22=OFF.

## 4.9.2 Automatic Summer Switch-Off

- **Function**

At higher outside temperatures it doesn't make sense to keep heating the building. The System Controller will switch the heating off when the average daily outdoor temperature (averaged over 24hrs) rises above the parameter (P26). A control differential of +/-0.5K is applied.

- **Algorithm**

| | |
|---|---|
| Average Outside Temperature > P26 | Summer Switch-Off condition is active. |
| Average Outside Temperature < P26-0.5K | Summer Switch-Off condition is not active. |

When the Summer Switch-Off condition is active, the heating is switched off.

- **Parameter Settings**

P26 Summer Switch-off Temperature (default 20°C)

- **Enable/Disable**

To disable the automatic summer switch-off function, set P26=OFF.



Все каталоги и инструкции здесь: https://splitsystema48.ru/instrukcii-po-ekspluatacii-kondicionerov.html

### 4.9.3. Pump and Valve Seizure Protection

- **Function**
  The System Controller has an anti-seize protection function for valves and pumps which helps to prevent these components sticking during long periods of inactivity. Every 24hrs the components which have not been used will be run for a short period.

### 4.9.4. Screed Function (Drying for New Floors)

- **Function**
  The screed function is used exclusively for the required drying of newly applied screed on floor heating systems. The process is based on EN 1264 part 4. When the screed function is activated :
  1. The flow temperature is kept constant at 25°C for 3 days,
  2. Heating is set at the maximum supply setpoint (P6) for 4 days
     (water temperature is always limited to 55°C)

  On completion of the screed function, the controller returns to normal operation.

- **To Activate**
  The function is activated by setting parameter P25 to 1. The screed function can be deactivated at any time by setting the parameter P25 to 0.

- **Diagram**

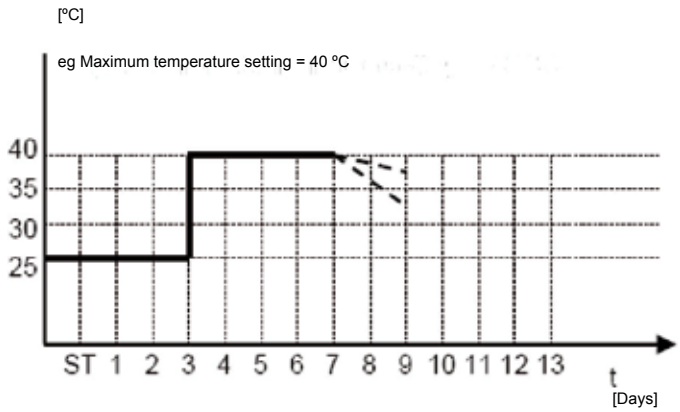


- **Parameter Settings**
  P25 Start Screed-Drying Function (default 0)

| | NOTE |
|---|---|
| - | *If there is a power interruption, the screed function will continue when the power is restored.* |



Все каталоги и инструкции здесь: https://splitsystema48.ru/instrukcii-po-ekspluatacii-kondicionerov.html

# 4.10. PARAMETER TABLES

## 4.10.1 Installer Parameters

- **Setting Instructions**

Please refer to the System Controller Installation & Operation Manual for instructions on how to set the installer parameters.

| ID | Parameter | CONF | Description | Min | Max | Step | Default |
|---|---|---|---|---|---|---|---|
| CONF | System Configuration | 12345 | Set according to the type of hydraulic configuration installed. | 1 | 5 | 1 | 3 |
| P1 | DHW Configuration | 123-5 | Set to 0=No DHW, 1=DHW valve, 2=DHW pump | 0 | 2 | 1 | 0 |
| P2 | Secondary Pump | 12--- | Set to 1 if a buffer/hydraulic separator and a secondary pump is used (CONF 1 or CONF 2 only) | 0 | 1 | 1 | 0 |
| P3 | Pump Overrun Time | 12345 | Sets how long the pumps run after the heating is switched off. | 1 | 10 | 1 | 2 min. |
| P4 | OTC Heating Curve Gradient | 12345 | Sets the heating curve for OTC control function | 0.2 | 2.2 | 0.1 | 1.1 |
| P5 | Minimum Supply Temperature | 12345 | Sets the minimum supply water temperature for the heating. | 5 | 40 | 1 | 15°C |
| P6 | Zone 1: Maximum Supply Temperature | 12345 | Sets the maximum supply water temperature for the heating (zone 1) | 20 | 55/65/ 90* | 1 | 55°C |
| P7 | Room Compensation Factor | 12345 | Sets the room temperature influence for the OTC control function | 0 | 5 | 0.5 | 2 |
| P9 | Actuator Run Time / Mixing valve Control | ---45 | Set to the running time of the actuator (see actuator manufacturer's technical data) | 30 | 600 | 10 | 120 s |
| P10 | DHW setpoint (not available if P1=0) | 123-5 | Setpoint for the DHW control function. | 45 | 65 | 1 | 45°C |
| P11 | DHW differential (not available if P1=0) | 123-5 | DHW control differential | 1 | 10 | 1 | 5 K |
| P12 | DHW supply offset (not available if P1=0) | 123-5 | Influences how quickly the hot water tank is heated | 1 | 30 | 1 | 10 K |
| P15 | Maximum Outdoor Temperature for Boiler / Electric Operation. | -2345 | Boiler / Electric heater will be disabled above this temperature (Heat Pump works on its own). OFF means the boiler/electric heater is always enabled. | -20 | 20, then OFF | 1 | 0°C |
| P14 | Heat Pump Minimum Outdoor Temperature (Config 3,4,5 only) | --345 | Heat Pump Operating Limits: Defines the lowest possible outside temperature of operation of the heat pump. | -25 | 20, then OFF | 1 | -20°C |
| P17 | Boiler Minimum ON Time | --345 | Sets the minimum ON time of the boiler to reduce inefficient short-cycling | 1 | 30 | 1 | 2 min |
| P18 | Boiler minimum OFF time | --345 | Sets the minimum OFF time of the boiler to reduce inefficient short-cycling | 1 | 30 | 1 | 5 min. |
| P19 | Waiting Time for Boiler/ Electric Heater | -2345 | Sets the minimum time the controller will wait (after the heat pump is switched on) before using the boiler or electric heater | 1 | 90 | 1 | 30 min. |
| P21 | Minimum Supply Setpoint during Frost Protection | 12345 | Sets the minimum supply water temperature when the frost protection function is active. | 10 | 35 | 1 | 20 °C |
| P22 | Frost Protection Activation Temperature | 12345 | Sets the outdoor temperature below which the frost protection function will activate. | -20, then OFF | 5 | 1 | 2°C |
| P23 | Zone2: Maximum Supply Temperature | 12345 | Sets the maximum supply water temperature for the heating (zone 2 extension) | 20 | 55/65/ 90* | 1 | 50°C |
| P24 | Configuration of Tariff/ Timer Input | 12345 | The sets the meaning of the digital input "Tariff/ Timer" | 0 | 4 | 1 | 4 |
| P25 | Start Screed-Drying Function | 12345 | Set to 1 to start immediately the underfloor screed-drying function | 0 | 1 | 1 | 0 |
| P26 | Summer switch-off temperature | 12345 | Sets the daily average outdoor temperature above which the heating will be switched off. | 10 | 25, then OFF | 1 | 20°C |





Все каталоги и инструкции здесь: https://splitsystema48.ru/instrukcii-po-ekspluatacii-kondicionerov.html

| ID | Parameter | CONF | Description | Min | Max | Step | Default |
|---|---|---|---|---|---|---|---|
| P27 | Maximum allowed DHW loading time (not available if P1=0) | 123-5 | Sets the maximum time allowed for DHW loading. After this time, if the DHW setpoint is not achieved, the controller will nevertheless return to heating. | 1 | 12 | 0.5 | 1.5 hr |
| P30 | No-load function enable | 12345 | Disables the heating in Zone 1 if the OTC calculated supply setpoint falls below the room temperature | 0 | 1 | 1 | 1 |
| P31 | Heat Pump Sensor Offset | 12345 | Compensates for differences in temperature measurement between the Heat Pump and the Supply Sensor. | 0 | 5 | 1 | 3°C |
| P32 | Supply-Return Difference Control Limit | -2345 | Control parameter to help maximise running time of the heat pump and minimise use of the electric heater or boiler. | 1, then OFF | 10 | 1 | 3°C |
| P33 | Return Temperature Limit Offset | -2345 | Control parameter to prevent electric heater use when the return temperature is too high for heat pump operation. | 1, then OFF | 15 | 1 | OFF |
| P34 | DHW Electric Heater Waiting Time (not available if P1=0) | 12--- | Sets the time to wait after starting to heat the DHW tank before enabling the special output for “DHW electric heater enable” | 0 | 60 | 1 | 45min |
| P35 | Mixing Valve Opening Delay Time | ---45 | For solid fuel or oil fired boilers. Prevents the mixing valve opening for the set delay time to allow the boiler to heat up (minutes). | 1, then OFF | 20 | 1 | OFF |
| EP37 | DHW offset for Heat Pump maximum supply temperature. | 12345 | The maximum DHW temperature able to be supplied by the heat pump is the Heat Pump maximum supply temperature minus this EP37 value | 0 | 20 | 1 | 7 K |

**CONF: Only parameters that are allowed in a particular configuration are shown on the display..**

## 4.10.1. Engineering Parameters

- **Function**

Engineering Parameters (EP) are provided for service engineers or the manufacturer to make adjustments that may be required to fix difficult or unusual problems. They are accessed in a similar way to the installer parameters via the front panel keypad.

- **Setting Instructions**

To enter Engineering Parameter Display mode from the Normal Operation mode, press the SET, SEL and i buttons together for at least one second. The display will show “EP1” (or “EP2” or “EP5” depending on the system configuration) to indicate that the System Controller is in Engineering Parameter Display mode, and shows the parameter abbreviation and its current setting.

1. Use the + and - buttons to move up or down the parameter list according to the table.
2. To change a parameter setting, use the SET button to enter Parameter Setting Mode. The value of the parameter will flash to show that it can now be changed. Use the + and - buttons to change the value to the desired setting.
3. To store the parameter setting, press the SET button. The flashing will stop to show the value has been saved. Instead, to cancel the change, and retain the previously stored value, press the SEL button.
4. Continue to change the parameters as required. When finished, or at any time, pressing the i button will return the display to Normal Operation mode.



Все каталоги и инструкции здесь: https://splitsystema48.ru/instrukcii-po-ekspluatacii-kondicionerov.html

| ID | Parameter | CONF | Description | Min | Max | Step | Default |
|---|---|---|---|---|---|---|---|
| EP1 | Mixing Valve Integral Factor | ---45 | Mixing Valve Control: the integral reset factor of the P+I control algorithm. | 0.0 | 20.0 | 0.1 | 2.5 %/Kmin |
| EP2 | Integral Factor Required Load | -2345 | Electric Heater or Boiler Control: the integral reset factor of the P+I control algorithm. | 0.0 | 20.0 | 0.1 | 2.5 %K/min |
| EP3 | Difference Supply Water Temperature | ----5 | Mixing / Bypass Valve Control: offset to decide when to start the mixing control. | 0.0 | 5.0 | 0.1 | 1.5 K |
| EP5 | Show Entire Menu | 12345 | Setting EP5=1 shows all installer and engineering parameters independent of configuration. | 0 | 1 | 1 | 0 |
| EP6 | Heat Pump supply setpoint at 4mA | 12345 | Heat Pump Control: the outlet supply setpoint of the Heat Pump for a 4mA control signal. | 10 | 30 | 1 | 20°C |
| EP7 | Heat Pump supply setpoint at 20mA | 12345 | Heat Pump Control: the outlet supply setpoint of the Heat Pump for a 20mA control signal. | 40 | 70 | 1 | 55°C |
| EP8 | Mixing Valve Proportional Band | ---45 | Mixing Valve Control: the proportional band of the P+I control algorithm. | 0.2 | 20.0 | 0.2 | 6.0K |
| EP13 | Heat Pump Maximum Return Temperature | 12345 | Heat Pump Control: the maximum return temperature allowed while the heat pump is on. | 20 | 70 | 1 | 60°C |
| EP14 | Heat Pump Minimum Outdoor Temperature (Config 1,2 only) | 12--- | Heat Pump Operating Limits: Defines the lowest possible outside temperature of operation of the heat pump. | -25 | 20, then OFF | 1 | -20°C |
| EP16 | P band Required Load | -2345 | Electric Heater or Boiler Control: the proportional band of the P+I control algorithm. | 0.2 | 20.0 | 0.2 | 6.0K |
| EP20 | Inter-Stage Waiting Time | -2--- | Electric Heater Control: The minimum time between switching stages of the electric heater. | 10 | 250 | 10 | 10sec |
| EP28 | Heat Pump Minimum Supply Temperature. | 12345 | Heat Pump Operating Limits: minimum supply temperature below outside temperature of EP32 | 10 | 40 | 1 | 35°C |
| EP29 | Heat Pump Maximum Supply Temperature | 12345 | Heat Pump Operating Limits: maximum supply above outdoor temperature of EP34. | 40 | 70 | 1 | 55°C |
| EP31 | Offset Supply Setpoint | -2345 | Electric Heater or Boiler Control: reduced supply setpoint offset for control of electric heater or boiler. | 0 | 10 | 1 | 4K |
| EP32 | Heat Pump Minimum Supply Inflexion Point | 12345 | Heat Pump Operating Limits: parameter to define shape of minimum supply temperature operating curve. | -25 | 20 | 1 | 0°C |
| EP33 | Heat Pump Maximum Supply Temperature | 12345 | Heat Pump Operating Limits: maximum supply temperature below outside temperature of EP34 | 40 | 70 | 1 | 50°C |
| EP34 | Heat Pump Maximum Supply Changing Point | 12345 | Heat Pump Operating Limits: parameter to define point at which maximum supply temperature changes. | -25 | 20 | 1 | -10°C |
| EP35 | Heat Pump Max Time High Setpoint | 12345 | DHW Control: time that supply setpoint is held at maximum when DHW demand occurs. | 0 | 180 | 1 | 180sec |
| EP36 | Boiler Delay Time | --345 | Boiler Control: Inhibits the Supply-Return Difference Check until this time has expired after the boiler is switched on. | 1 | 15 | 1 | 5min |

**CONF: Only parameters that are allowed in a particular configuration are shown on the display..**





Все каталоги и инструкции здесь: https://splitsystema48.ru/instrukcii-po-ekspluatacii-kondicionerov.html

# 4.11. CONVERSION TABLE: HEAT PUMP SUPPLY TEMPERATURE TO mA

The following table converts the Heat Pump supply temperature setting in °C to current (I) in mA.

| mA | Setting (°C) | mA | Setting (°C) | mA | Setting (°C) |
|---|---|---|---|---|---|
| 2.0 ≤ I < 2.2 | 15.5 | 8.1 ≤ I < 8.4 | 29.0 | 14.1 ≤ I < 14.3 | 42.0 |
| 2.2 ≤ I < 2.4 | 16.0 | 8.4 ≤ I < 8.6 | 29.5 | 14.3 ≤ I < 14.5 | 42.5 |
| 2.4 ≤ I < 2.7 | 16.5 | 8.6 ≤ I < 8.8 | 30.0 | 14.5 ≤ I < 14.8 | 43.0 |
| 2.7 ≤ I < 2.9 | 17.0 | 8.8 ≤ I < 9.1 | 30.5 | 14.8 ≤ I < 15.0 | 43.5 |
| 2.9 ≤ I < 3.1 | 17.5 | 9.1 ≤ I < 9.3 | 31.0 | 15.0 ≤ I < 15.2 | 44.0 |
| 3.1 ≤ I < 3.3 | 18.0 | 9.3 ≤ I < 9.5 | 31.5 | 15.2 ≤ I < 15.5 | 44.5 |
| 3.3 ≤ I < 3.6 | 18.5 | 9.5 ≤ I < 9.7 | 32.0 | 15.5 ≤ I < 15.7 | 45.0 |
| 3.6 ≤ I < 3.8 | 19.0 | 9.7 ≤ I < 10.0 | 32.5 | 15.7 ≤ I < 15.9 | 45.5 |
| 3.8 ≤ I < 4.0 | 19.5 | 10.0 ≤ I < 10.2 | 33.0 | 15.9 ≤ I < 16.1 | 46.0 |
| 4.0 ≤ I < 4.3 | 20.0 | 10.2 ≤ I < 10.4 | 33.5 | 16.1 ≤ I < 16.4 | 46.5 |
| 4.3 ≤ I < 4.5 | 20.5 | 10.4 ≤ I < 10.7 | 34.0 | 16.4 ≤ I < 16.6 | 47.0 |
| 4.5 ≤ I < 4.7 | 21.0 | 10.7 ≤ I < 10.9 | 34.5 | 16.6 ≤ I < 16.8 | 47.5 |
| 4.7 ≤ I < 4.9 | 21.5 | 10.9 ≤ I < 11.1 | 35.0 | 16.8 ≤ I < 17.1 | 48.0 |
| 4.9 ≤ I < 5.2 | 22.0 | 11.1 ≤ I < 11.3 | 35.5 | 17.1 ≤ I < 17.3 | 48.5 |
| 5.2 ≤ I < 5.4 | 22.5 | 11.3 ≤ I < 11.6 | 36.0 | 17.3 ≤ I < 17.5 | 49.0 |
| 5.4 ≤ I < 5.6 | 23.0 | 11.6 ≤ I < 11.8 | 36.5 | 17.5 ≤ I < 17.7 | 49.5 |
| 5.6 ≤ I < 5.9 | 23.5 | 11.8 ≤ I < 12.0 | 37.0 | 17.7 ≤ I < 18.0 | 50.0 |
| 5.9 ≤ I < 6.1 | 24.0 | 12.0 ≤ I < 12.3 | 37.5 | 18.0 ≤ I < 18.2 | 50.5 |
| 6.1 ≤ I < 6.3 | 24.5 | 12.3 ≤ I < 12.5 | 38.0 | 18.2 ≤ I < 18.4 | 51.0 |
| 6.3 ≤ I < 6.5 | 25.0 | 12.5 ≤ I < 12.7 | 38.5 | 18.4 ≤ I < 18.7 | 51.5 |
| 6.5 ≤ I < 6.8 | 25.5 | 12.7 ≤ I < 12.9 | 39.0 | 18.7 ≤ I < 18.9 | 52.0 |
| 6.8 ≤ I < 7.0 | 26.0 | 12.9 ≤ I < 13.2 | 39.5 | 18.9 ≤ I < 19.1 | 52.5 |
| 7.0 ≤ I < 7.2 | 26.5 | 13.2 ≤ I < 13.4 | 40.0 | 19.1 ≤ I < 19.3 | 53.0 |
| 7.2 ≤ I < 7.5 | 27.0 | 13.4 ≤ I < 13.6 | 40.5 | 19.3 ≤ I < 19.6 | 53.5 |
| 7.5 ≤ I < 7.7 | 27.5 | 13.6 ≤ I < 13.9 | 41.0 | 19.6 ≤ I < 19.8 | 54.0 |
| 7.7 ≤ I < 7.9 | 28.0 | 13.9 ≤ I < 14.1 | 41.5 | 19.8 ≤ I < 20.0 | 54.5 |
| 7.9 ≤ I < 8.1 | 28.5 | | | 20.0 ≤ I < 20.3 | 55.0 |

# 4.12. R RESISTANCE TABLES

NTC 20k Celsius Temperature Characteristic

| temp. (°C) | resist. (Ω) | temp. (°C) | resist. (Ω) | temp. (°C) | resist. (Ω) | temp. (°C) | resist. (Ω) | temp. (°C) | resist. (Ω) |
|---|---|---|---|---|---|---|---|---|---|
| -50.0 | 1659706 | -9.0 | 115575 | 31.0 | 15180 | 71.0 | 2989 | 111.0 | 793.7 |
| -49.0 | 1541379 | -8.0 | 109189 | 32.0 | 14511 | 72.0 | 2882 | 112.0 | 770.3 |
| -48.0 | 1432919 | -7.0 | 103194 | 33.0 | 13875 | 73.0 | 2779 | 113.0 | 747.7 |
| -47.0 | 1332091 | -6.0 | 97564 | 34.0 | 13270 | 74.0 | 2681 | 114.0 | 725.8 |
| -46.0 | 1238358 | -5.0 | 92274 | 35.0 | 12695 | 75.0 | 2587 | 115.0 | 704.7 |
| -45.0 | 1153525 | -4.0 | 87303 | 36.0 | 12148 | 76.0 | 2496 | 116.0 | 684.2 |
| -44.0 | 1073429 | -3.0 | 82628 | 37.0 | 11627 | 77.0 | 2409 | 117.0 | 664.5 |
| -43.0 | 999894 | -2.0 | 78232 | 38.0 | 11131 | 78.0 | 2325 | 118.0 | 645.3 |
| -42.0 | 932327 | -1.0 | 74094 | 39.0 | 10659 | 79.0 | 2245 | 119.0 | 626.9 |
| -41.0 | 869327 | 0.0 | 70200 | 40.0 | 10210 | 80.0 | 2168 | 120.0 | 609.0 |
| -40.0 | 814000 | 1.0 | 66515 | 41.0 | 9781 | 81.0 | 2094 | 121.0 | 591.7 |
| -39.0 | 759391 | 2.0 | 63046 | 42.0 | 9373 | 82.0 | 2022 | 122.0 | 575.0 |
| -38.0 | 708806 | 3.0 | 59777 | 43.0 | 8983 | 83.0 | 1954 | 123.0 | 558.8 |
| -37.0 | 661924 | 4.0 | 56697 | 44.0 | 8612 | 84.0 | 1888 | 124.0 | 543.2 |
| -36.0 | 618451 | 5.0 | 53793 | 45.0 | 8258 | 85.0 | 1824 | 125.0 | 528.0 |
| -35.0 | 578119 | 6.0 | 51055 | 46.0 | 7920 | 86.0 | 1763 | 126.0 | 513 |
| -34.0 | 540677 | 7.0 | 48472 | 47.0 | 7598 | 87.0 | 1705 | 127.0 | 499 |
| -33.0 | 505902 | 8.0 | 46034 | 48.0 | 7291 | 88.0 | 1648 | 128.0 | 485 |
| -32.0 | 473588 | 9.0 | 43733 | 49.0 | 6998 | 89.0 | 1594 | 129.0 | 472 |
| -31.0 | 443546 | 10.0 | 41560 | 50.0 | 6718 | 90.0 | 1542 | 130.0 | 459 |
| -30.0 | 415600 | 11.0 | 39500 | 51.0 | 6450 | 91.0 | 1491 | | |
| -29.0 | 389298 | 12.0 | 37553 | 52.0 | 6195 | 92.0 | 1443 | | |
| -28.0 | 364833 | 13.0 | 35714 | 53.0 | 5951 | 93.0 | 1396 | | |
| -27.0 | 342063 | 14.0 | 33975 | 54.0 | 5718 | 94.0 | 1351 | | |
| -26.0 | 320860 | 15.0 | 32331 | 55.0 | 5495 | 95.0 | 1308 | | |
| -25.0 | 301107 | 16.0 | 30775 | 56.0 | 5282 | 96.0 | 1266 | | |
| -24.0 | 282696 | 17.0 | 29303 | 57.0 | 5078 | 97.0 | 1226 | | |
| -23.0 | 265528 | 18.0 | 27909 | 58.0 | 4883 | 98.0 | 1187 | | |
| -22.0 | 249511 | 19.0 | 26590 | 59.0 | 4696 | 99.0 | 1150 | | |
| -21.0 | 234561 | 20.0 | 25340 | 60.0 | 4518 | 100.0 | 1114 | | |
| -20.0 | 220600 | 21.0 | 24155 | 61.0 | 4347 | 101.0 | 1079 | | |
| -19.0 | 207607 | 22.0 | 23032 | 62.0 | 4184 | 102.0 | 1046 | | |
| -18.0 | 195459 | 23.0 | 21967 | 63.0 | 4027 | 103.0 | 1014 | | |
| -17.0 | 184096 | 24.0 | 20958 | 64.0 | 3877 | 104.0 | 982.8 | | |
| -16.0 | 173463 | 25.0 | 20000 | 65.0 | 3734 | 105.0 | 952.8 | | |
| -15.0 | 163508 | 26.0 | 19089 | 66.0 | 3596 | 106.0 | 923.9 | | |
| -14.0 | 154185 | 27.0 | 18224 | 67.0 | 3464 | 107.0 | 896.0 | | |
| -13.0 | 145450 | 28.0 | 17404 | 68.0 | 3338 | 108.0 | 869.1 | | |
| -12.0 | 137262 | 29.0 | 16624 | 69.0 | 3216 | 109.0 | 843.1 | | |
| -11.0 | 129583 | 30.0 | 15884 | 70.0 | 3100 | 110.0 | 818.0 | | |
| -10.0 | 122380 | | | | | | | | |



Все каталоги и инструкции здесь: https://splitsystema48.ru/instrukcii-po-ekspluatacii-kondicionerov.html

# 4.13. TECHNICAL DATA

## 4.13.1. System Controller (XEK23232 A)

| | |
|---|---|
| **Power supply** | 230Vac +10%, -15%, 50Hz |
| **Power Consumption** | Max 5VA |
| **Ambient Operating Temperature** | 0 to 50°C |
| **Storage Temperature** | -20 to 55°C |
| **Humidity** | 0 to 90% RH non-condensing |
| **Dimensions** | 121 x 161.5 x 46mm (WxHxD) |
| **Material Base** | PA-GF 25-FR |
| **Material Cover** | PC-FR (VO certified) |
| **Degree of Protection** | IP20 (IP30 with cable glands) |
| **Fire Class** | V0 |
| **Protection class** | Class I (according to EN60730-1) |
| **Emissions Standards** | Complies with EN61000-6-3 |
| **Immunity Standards** | Complies with EN61000-6-1 |
| **Safety Standards** | Complies with EN60730-1:2007 |
| **CE Compliance** | 93/68/EEC |
| **WEEE Compliance** | 2002/96/EC |
| **RoHS Compliance** | 2002/95/EC |
| **Heat Pump Control Signal** | 0-20mA, (max 10V @ 20mA), cable length max 20m (with wire cross-section 0.5mm²) |
| **Boiler output relay** | Potential free contacts (24V-230Vac 0.5A) |
| **DHW electric heater enable output relay** | Potential-free contacts (230Vac 1A) |
| **All other output relays** | 230Vac 1A (3A total) |
| **Tariff / Timer Input** | Input for potential-free contact (rated 5Vdc, switching current 1mA) |
| **Heat Pump Fault Input** | Input for potential-free contact (rated 5Vdc, switching current 100mA) |
| **RF Receiver connection** | Serial communications according to OpenTherm® technical specification v2.3 (max 18V, 23mA, 1000 baud) |
| **Diagnostic Interface** | I²C Bus Specification v2.1. An I²C to RS232 interface is required for connection to a PC. |

## 4.13.2. Water Temperature Sensor (XEK35524 A)

| | |
|---|---|
| **Element Type** | NTC 20k @ 25°C |
| **Mounting** | Insertion well, or strap-on pipe with provided metal clip |
| **Range, Precision** | +5 to +90°C, +/-1K |
| **Cable Length** | 2m cable, 2 core. (max cable length 100m) |
| **Dimensions (cartridge)** | 6.5mm Ø, 50mm long |
| **Protection class** | IP62 |

## 4.13.3. Outdoor Temperature Sensor (XEK35438 A)

| | |
|---|---|
| **Element Type** | NTC 20k @ 25°C |
| **Mounting** | Outside wall mounting |
| **Range, Precision** | -30 to +40°C, +/-1K |
| **Dimensions** | 95 x 65 x 70mm (HxWxD) |
| **Housing** | Plastic (ABS) |
| **Electric Connection** | Terminals for 2 x 1.5mm² cable |
| **Cable Length** | Max 100m |
| **Protection Class** | IP30 |





Все каталоги и инструкции здесь: https://splitsystema48.ru/instrukcii-po-ekspluatacii-kondicionerov.html

# 4.14. MOUNTING

The System Controller is designed to be mounted either directly onto the wall or on a DIN-rail.

| | CAUTION |
|---|---|
| - | *Incorrect wall mounting. Reduction of the IP protection degree. Perform the installation of the System Controller without damaging the unit.* |

## 4.14.1. Fitting or removing the front cover

To remove the front cover from the mounting base

1. Unscrew the two retaining screws ①.
2. Pull the front cover off the mounting base ②.

| | CAUTION |
|---|---|
| - | *Crash hazard. Wire damage. Make sure that all connector pins and blocks are correctly located before pushing the front cover onto the base, otherwise, damage may occur.* |

To fit the front cover onto the mounting base:

1. Line up the mounting base and front cover.
2. Push the front cover firmly onto the mounting base.
3. Secure the front cover using the two retaining screws.

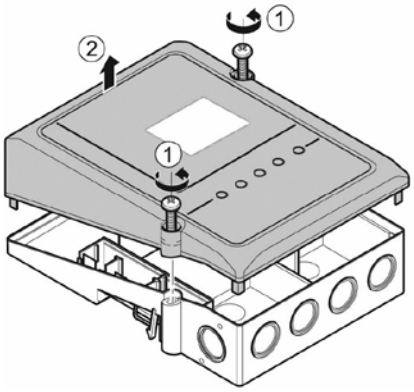


## 4.14.2. Wall Mounting

- Four 4.0 mm holes for installation are located on the System Controller mounting base for wall mounting.
- Before wall mounting, remove the four break-outs (A) in the case as necessary.



Все каталоги и инструкции здесь: https://splitsystema48.ru/instrukcii-po-ekspluatacii-kondicionerov.html

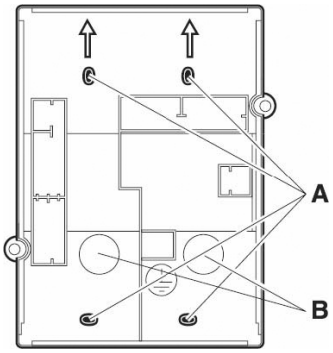


- For wire entry, remove the appropriate break-outs in the mounting box (B).
- Use screws (max diameter 4mm) and wall plugs suitable for the wall material (not included in the delivery).

### 4.14.3. Mounting on a DIN-rail

- The system controller can easily be clicked on to a DIN-rail via the locating clips on both sides of the mounting base.

1. Hold the system controller at an angle, and hook onto the top of the DIN-rail.
2. Push the system controller straight and against the DIN-rail.
3. The locating clips will snap on the bottom of the DIN-rail.
4. For removal, bend the clips ① and pull off the system controller from the DIN-rail ②.

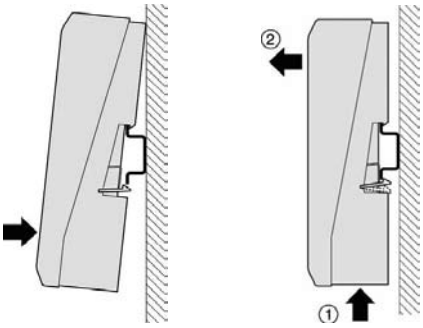


4

## 4.15. MOUNTING THE SENSORS

### 4.15.1. Water Temperature Sensor

The water temperature sensor can be inserted into a suitable immersion well or strapped on to a pipe using the supplied metal clip.

| | NOTE |
|---|---|
| - | *For strap-on mounting, the metal clip must be used and tightened firmly to provide a good thermal connection. A badly-mounted sensor can cause control problems.* |

The best location for measuring the temperature and, therefore, inserting the sensor, is the immersion well for boiler temperature displays, boiler thermostat, and safe temperature guard. There is usually space for the sensor in this well (sensor cartridge: 6.5 mm Ø, 50 mm long).

In order to have good heat transmission between the sensor cartridge and the immersion well, the contact strip supplied must be inserted along with the cartridge. If there is no space in the well for the sensor, another separate well can be used near the aforementioned immersion well.



Все каталоги и инструкции здесь: https://splitsystema48.ru/instrukcii-po-ekspluatacii-kondicionerov.html

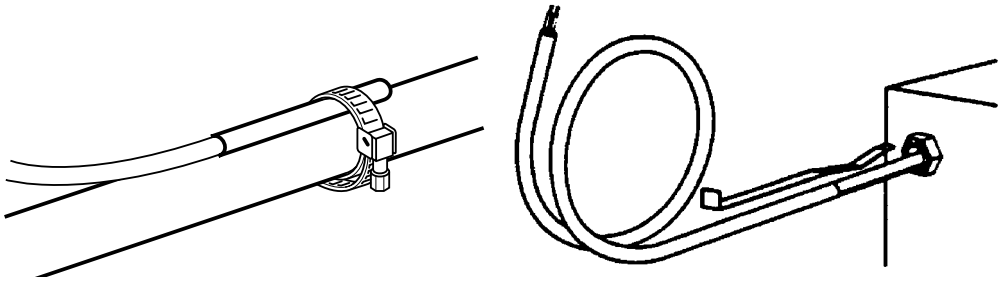

## 4.15.2. Outside Temperature Sensor

- **Location of device**

The most important rule for locating the Outdoor Temperature Sensor is that it should have the same temperature, wind, and solar conditions as the occupied rooms. In most cases, the Outdoor Temperature Sensor is to be mounted on the coldest side of the building (N–NW side) so as not to be affected by direct sunshine. This is to ensure that it will be warm enough in each room of the house. Only when the windows of all the rooms to be regulated face in the same direction can the sensor element be mounted onto the outside of this same wall. This can also be the south side of the house. The Outdoor Temperature Sensor's protective housing prevents the sun's rays from affecting the sensor. If the sensor has been mounted on the south side of a house with large windows facing in this direction, it is recommended that you remove the sun guard. Do not mount the Outdoor Temperature Sensor in a protected area, such as a wall niche or under the balcony. It should be put on an open façade so that it can detect all weather conditions. Avoid mounting the sensor above doors and windows since warm air movements may otherwise influence the measurement results. The Temperature Sensor should be mounted about 2/3 the way up the wall on buildings of not more than 3 stories; on taller buildings, between the second and third stories.

- **Mounting**

Press in the clasp (**R**) and pull off the top (**H**). Pull the clip (**B**) out of the housing (**G**). Screw on the clip (**B**) and put on the housing. To wire, unscrew the lid. Slide the top (**H**) over the housing until the clasp is firmly attached.

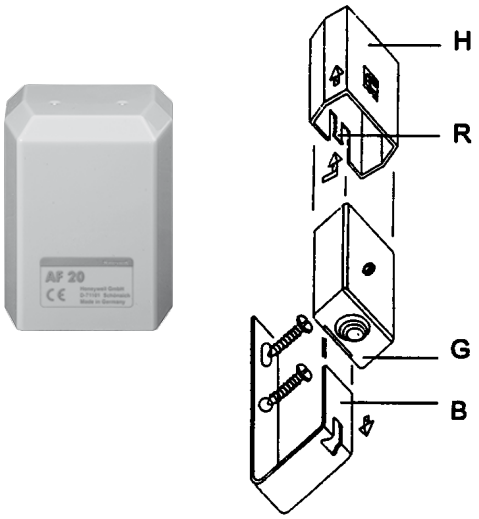




Все каталоги и инструкции здесь: https://splitsystema48.ru/instrukcii-po-ekspluatacii-kondicionerov.html

# 4.16. ELECTRICAL WIRING

| | CAUTION |
|---|---|

- *Electrical hazard. Can cause serious injuries or death.*
  - *Do not connect or adjust any wiring or connections unless the main power switch is OFF.*
  - *Make sure that all the power sources are switched OFF.*
  - *Isolate the mains power supply before installing the System Controller. Do not reconnect the mains power supply until the installation is completed.*
  - *The system controller must be intalled by a suitably qualified person, in accordance with local standards and guidelines.*

The mounting base has two options for wiring: wall or surface-wiring, with wires from the rear or wiring from the bottom or sides. For safety reasons, the power source wiring and signal wires are separated and in different compartments of the mounting base

- On the left side the signal wiring is laid out (inputs, mainly sensors).
- On the right side, the power source and earth wiring are situated (power and output relay contacts).

| | NOTE |
|---|---|

- *It is important that power supply lines are kept separate from signal/ data communications lines. This is to minimise the risk of electrical interference.*

## 4.16.1. Wiring access ports

4

- **Wiring holes for wall or surface-wiring**

  When wiring through the back of the mounting base remove the breakout ports from the wiring holes at the rear base.

- **Wiring holes for side- or bottom-wiring**

  When wiring through the bottom or side of the mounting base, insulated cables must be used. To ensure safety, appropriate cable glands (not included with the System Controller) must be used.

  To install the cable glands, remove the breakout ports from the wiring holes at the required location in the base.

| | NOTE |
|---|---|

- *That cable glands will fit a range of cable diameters; therefore check to ensure that the proper combination is used.*

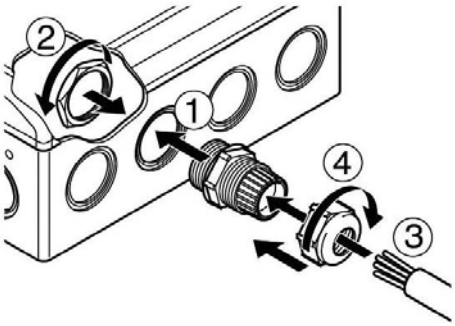




Все каталоги и инструкции здесь: https://splitsystema48.ru/instrukcii-po-ekspluatacii-kondicionerov.html

## 4.16.1. Wiring connections

| | CAUTION |
|---|---|
| - | *Static electricity. Malfunction.The electronic components within the System Controller are susceptible to damage caused by static electricity. When handling the device:* |
| | *- Do not touch internal components.* |
| | *- Touch an earthed piece of metal to discharge static electricity from your body.* |
| - | *Incorret wiring. Electrical damage. A short circuit or incorrect installation will damage the system controller.* |

- **The terminal blocks**

The terminal blocks (A, B and C) have the same terminals and are suitable for wires from 0.3 to 1.6mm$^2$. The earth connector block D is suitable for wires from 0.3 to 2.7mm$^2$.

| | NOTE |
|---|---|
| - | *In some applications, there may be several input and output cables that cannot be connected directly within the system controller terminal blocks. In such cases, it is recommended that a separate wiring centre is used, with an appropriate cover as necessary.* |

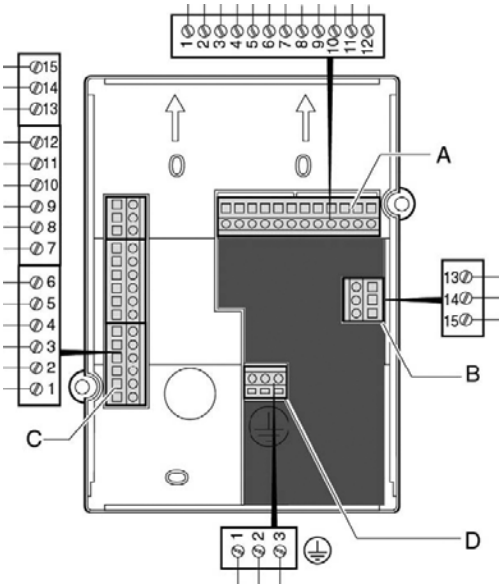


- **Mains power supply – Terminal block B**

The mains power connection (230VAC) is wired to connector block B, terminals 13 and 15. Terminal 13 and 14 are internally connected.

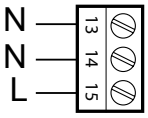


- **Earth terminals – Terminal block D**

The earth wires coming from the mains power cable and the pump, mixing valve, heat pump and boiler, can be combined and connected to connector block D. All three terminals are internally connected.

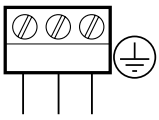



Все каталоги и инструкции здесь: https://splitsystema48.ru/instrukcii-po-ekspluatacii-kondicionerov.html

## 4.16.2 System component connections

- **Heat pump**

The System Controller controls the heat pump outlet water temperature by a 4-20mA signal. When there is no demand for the heat pump to be on, the System Controller directly switches the heat pump off. The heat pump can signal to the System Controller when it has a fault so that a fault code can be displayed and appropriate action taken.

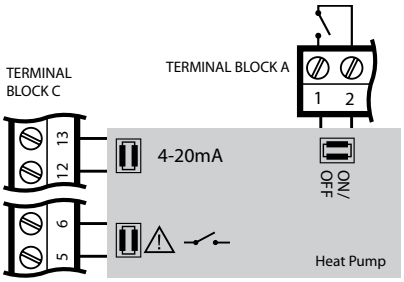


| | NOTE |
|---|---|
| - | *The 4-20mA signal is polarity-sensitive. Connect the wires as shown. Please refer to heat pump installation manual for terminal connections.* |

- **Three- stage electric heater**

In a mono-energetic system (CONF 2), the electric heater is used if required to increase the supply water temperature.

P19 Waiting time for boiler/electric heater

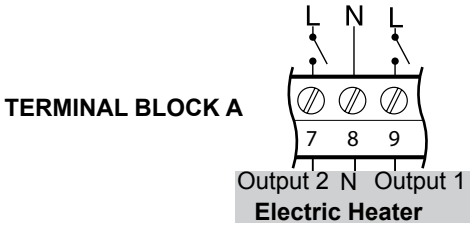


- **Boiler**

In a Bi-Valent System (CONF 3,4,5), the boiler is used when the heat pump cannot achieve the desired supply temperature on its own. Set the minimum on and off times (P17 and P18), according to boiler type, to prevent inefficient short-cycling.

P17 Boiler Minimum ON Time
P18 Boiler Minimum OFF Time
P19 Waiting time for boiler/electric heater

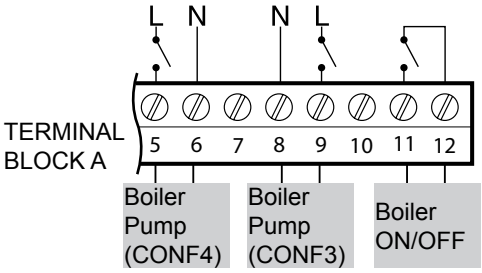




Все каталоги и инструкции здесь: https://splitsystema48.ru/instrukcii-po-ekspluatacii-kondicionerov.html

- **Mixing valve**

In a mixing system (CONF 4,5), the mixing valve is controlled to maintain the required supply temperature. Set the parameter (P9) according to the running time of the actuator used.

P9 Actuator Run Time for Mixing Valve

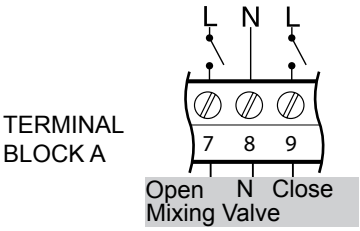


- **Secondary pump**

The secondary pump is the circulating pump for the main heating loop. In mono-valent and mono-energetic systems (CONF 1, 2), a secondary pump is only required if a hydraulic separator or buffer tank is used and in this case it is necessary to set the parameter (P2) to 1. Before the heating is switched off, the pump continues to run for a short time - pump overrun time (P3) – to distribute the energy through the system.

P2 Secondary Pump Selection (CONF 1,2)

P3 Pump Overrun Time

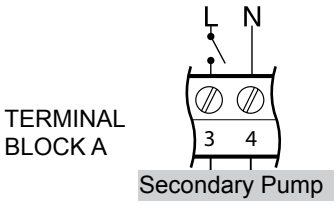


- **Domestic Hot Water (DHW)**

The System Controller can use the heat pump and boiler (bi-valent systems) to maintain the DHW storage tank at the DHW setpoint (P10).

P10 DHW setpoint

P11 DHW control differential

P12 DHW supply offset

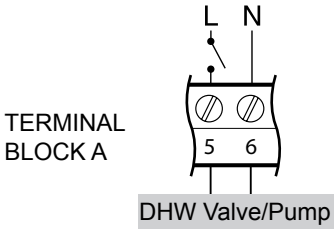


- **RF receiver box**

The RF Receiver is connected to the polarity-free terminals 7 and 8. The Room Unit and RF Receiver are already configured to communicate with each other. If the Room Unit or RF Receiver is replaced, it is necessary to use the RF Binding procedure.

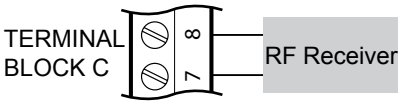


- **DHW electric heater**

(CONF 1 and 2 only)

If the DHW storage tank contains a thermostatic electric heater, the System Controller can enable it if the heat pump cannot achieve the required DHW temperature by itself. The system controller waits for a time (P34) after DHW storage heating is required before enabling this output.



Все каталоги и инструкции здесь: https://splitsystema48.ru/instrukcii-po-ekspluatacii-kondicionerov.html

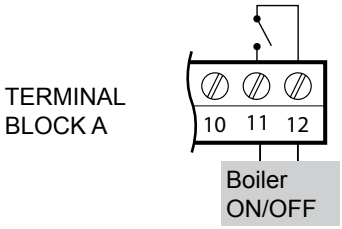


- **DHW time clock**

It is possible to connect an external time clock to the System Controller to provide time-of-day switching of the DHW storage. The input can be configured so that heating of the DHW storage tank is blocked (disabled) on either an open circuit or closed circuit condition.

P24 Configuration of Tariff/Timer Input

Note that the Tariff/Timer input (terminals 10 & 11) can be used for DHW Time Switching OR Tariff-Switching, not both.

| P24 | Open Circuit on terminals 10/11 | Closed Circuit on terminals 10/11 |
|---|---|---|
| 0 | Tariff/Timer Input is ignored | |
| 1 | Tariff/Timer input is used for Heat Pump blocking | |
| 2 | Tariff/Timer input is used for Heat Pump blocking | |
| 3 | DHW is blocked | DHW is enabled |
| 4 | DHW is enabled | DHW is blocked |

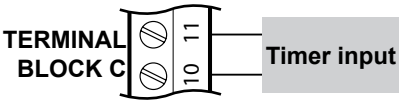


4

- **Tariff-switching device**

If a tariff-switching device (load shedding management) is provided by the electricity utility, it can be used to prevent the heat pump switching on, and the System Controller will use the boiler instead to satisfy the heating requirements (bi-valent systems only). The input can be configured so that the heat pump is blocked (disabled) on either an open circuit or closed circuit condition.

P24 Configuration of Tariff/Timer Input

Note that the Tariff/Timer input (terminals 10 & 11) can be used for DHW Time Switching OR Tariff-Switching, not both.

| P24 | Open Circuit on terminals 10/11 | Closed Circuit on terminals 10/11 |
|---|---|---|
| 0 | Tariff/Timer Input is ignored | |
| 1 | Heat Pump is enabled | Heat Pump is blocked |
| 2 | Heat Pump is blocked | Heat Pump is enabled |
| 3 | Tariff/Timer input is used for DHW time clock | |
| 4 | Tariff/Timer input is used for DHW time clock | |

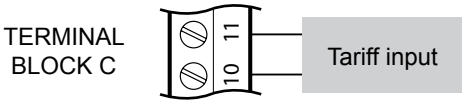


- **Temperature sensors**

All sensors used are of type NTC 20K (at 25°C).

- The outdoor sensor (T EXT) is used for the OTC control, frost protection, summer switch-off, and bi-valent system management.
- The DHW sensor (T DHW) is used to control the domestic hot water storage tank.
- The supply sensor (T SUP) is used to control the water temperature from the heat sources. Please see hydraulic diagrams for sensor positioning.
- The mixed supply sensor (T MIX) is used in systems with a mixing valve (CONF 4 & 5 only) and should be positioned after the mixing valve and the circulation pump.
- The return water sensor (T RET) is used to control the heat pump return temperature protection and should be positioned on the return pipe to the heat pump.



Все каталоги и инструкции здесь: https://splitsystema48.ru/instrukcii-po-ekspluatacii-kondicionerov.html

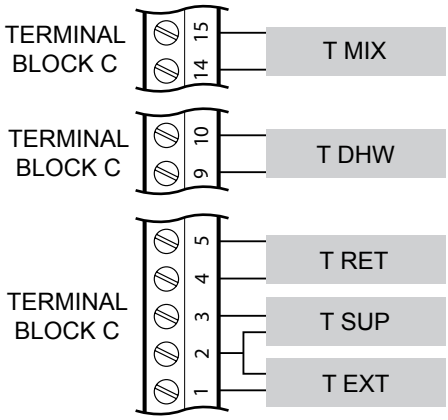


## 4.17. SYSTEM CONFIGURATIONS

◆ **Mono-valent systems 'conf 1'**

The Heat Pump is sized to provide 100% of the heating requirements on the coldest day of the year. Used in new builds or in boiler-replacement applications.

- Direct OTC Controlled Heating Loop
- Optional DHW storage with diverting valve or pump

This configuration is suitable for low-temperature radiators and underfloor heating systems.

● **Important settings**

- Set installer parameter CONF to value 1
- Set installer parameter P1 to 0 (no DHW), 1 (DHW valve) or 2 (DHW pump)
- Set P4 (OTC heating curve) according to building/ system

● **Additional settings**

- Set installer parameter P2 to 0 (no secondary pump), 1 (secondary pump9, if buffer tank or hydraulic separator is used
- DHW setpoint and control parameters
- Minimum and maximum supply temperatures
- Room temperature compensation
- Frost Protection parameters
- Summer switch-off setting
- Tariff/ Timer input configuration

  - Heat Pump
  - Optional DHW valve/ pump
  - Optional secondary pump
  - Optional DHW electric heater

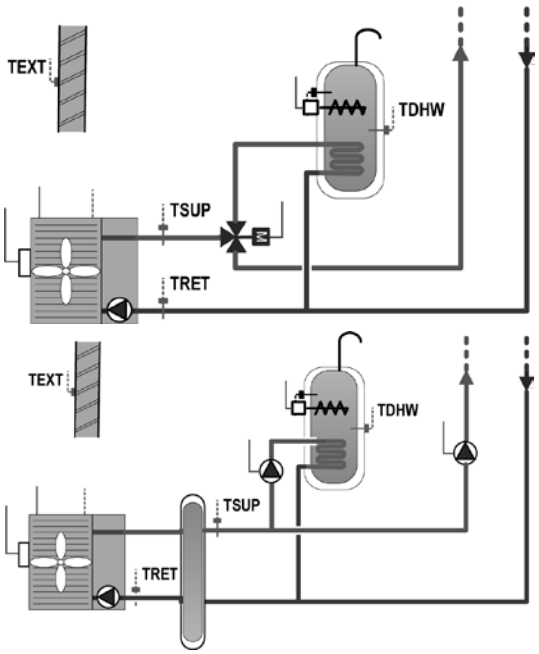




Все каталоги и инструкции здесь: https://splitsystema48.ru/instrukcii-po-ekspluatacii-kondicionerov.html

- **DHW electric heater**

The system controller can switch a DHW storage electric heater to achive higher DHW temperatures. The electric heater should have its own thermostat set to a higher value than the DHW setpoint of the system controller. Please take care about the type of DHW storage tank fitted and the position of the electric heater.

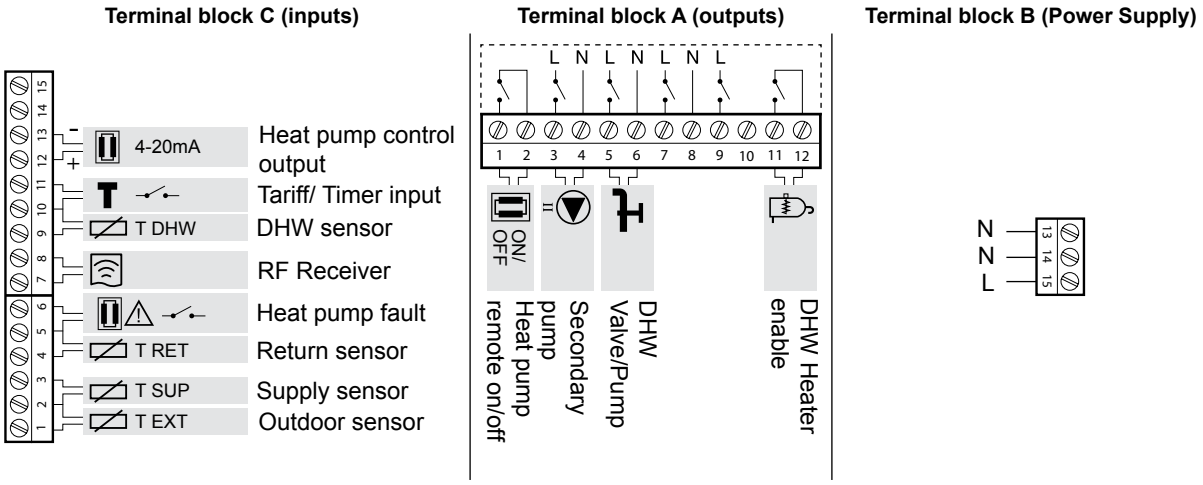


## ◆ Mono-energetic systems ‘conf 2’

The Heat Pump is sized to provide around 60% of the heating requirements on the coldest day of the year, and will typically provide 90-95% of the heating requirements over the whole heating season. An electric auxiliary heater is used to provide the additional heating required on cold days (additional capacity and/or higher temperature). Used in new builds or in boiler-replacement applications.

- Direct OTC Controlled Heating Loop
- Optional DHW storage with diverting valve or pump
- 3-stage electric heater

- **Important settings**
  - Set installer parameter CONF to value 2
  - Set installer parameter P1 to 0 (no DHW), 1 (DHW valve) or 2 (DHW pump)
  - Set P4 (OTC heating curve) according to building/ system
  - Set P33 (return temperature limit offset) to value 5 K

- **Additional settings**

  - Set installer parameter P2 to 0 (no secondary pump), 1 (secondary pump), if buffer tank or hydraulic separator is used
  - DHW setpoint and control parameters
  - Minimum and maximum supply temperatures
  - Room temperature compensation
  - Frost Protection parameters
  - Summer switch-off setting
  - Tariff/ Timer input configuration

    - Heat Pump
    - 3-stage electric heater
    - Optional DHW valve/ pump
    - Optional secondary pump
    - Optional DHW electric heater

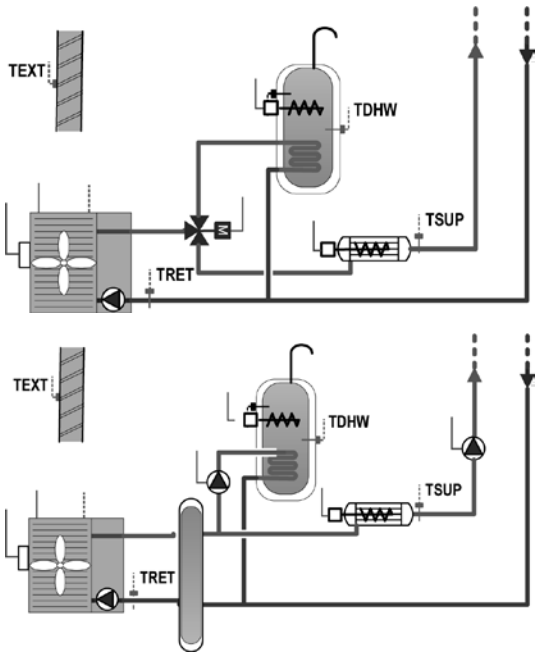




Все каталоги и инструкции здесь: https://splitsystema48.ru/instrukcii-po-ekspluatacii-kondicionerov.html

- **DHW electric heater**

The system controller can switch a DHW storage electric heater to achive higher DHW temperatures. The electric heater should have its own thermostat set to a higher value than the DHW setpoint of the system controller.

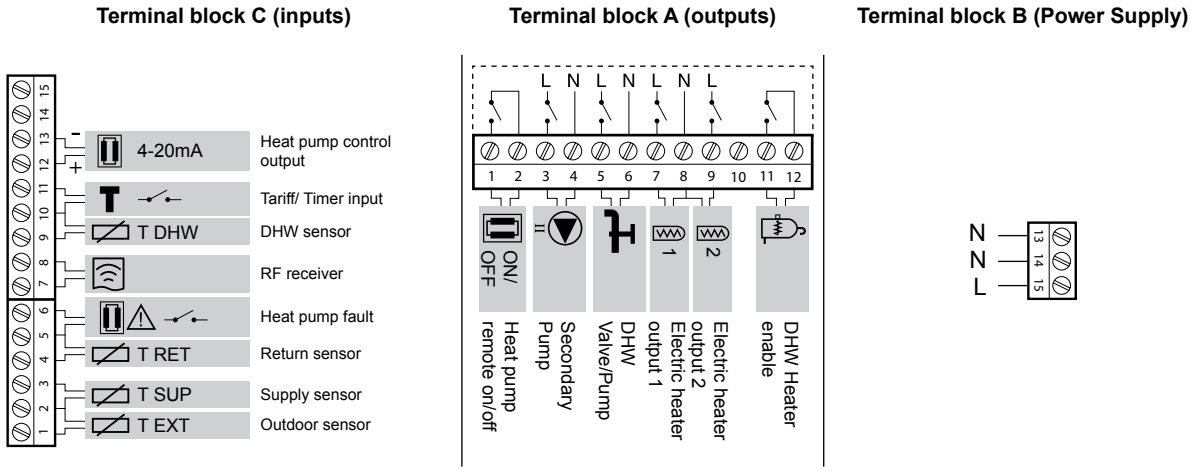


## ◆ Bi-Valent parallel systems - direct 'conf 3'

This system is recommended for retrofit (upgrade) applications where an existing gas/oil boiler will be retained to provide the full heating requirements on the coldest days of the year

- Direct OTC Controlled Heating Loop
- Sequence control of boiler and heat pump
- Optional DHW storage with diverting valve or pump

- **Important settings**
  - Set installer parameter CONF to value 3
  - Set installer parameter P1 to 0 (no DHW), 1 (DHW valve) or 2 (DHW pump)
  - Set P4 (OTC heating curve) according to building/ system

- **Additional settings**

  - Boiler control parameters
  - DHW setpoint and control parameters
  - Minimum and maximum supply temperatures
  - Room temperature compensation
  - Frost Protection parameters
  - Summer switch-off setting
  - Tariff/ Timer input configuration
  - To select alternative operation (heat pump or boiler can operate separately, but not at the same time)

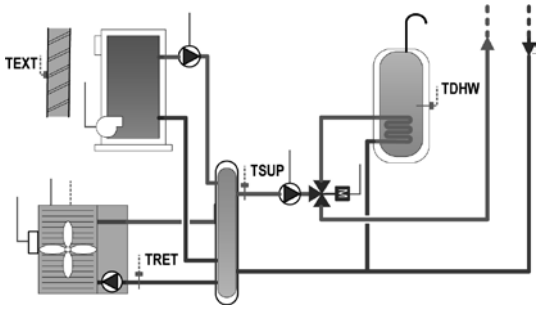


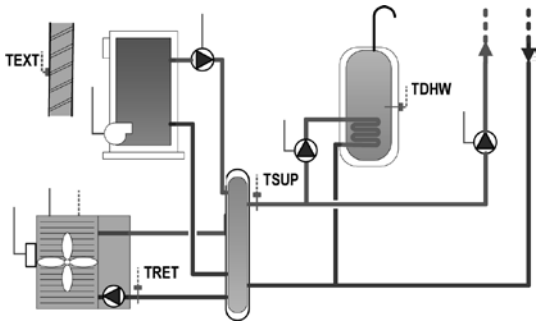


  - Heat Pump
  - Boiler
  - Secondary pump
  - Optional boiler primary pump
  - Optional DHW valve/ pump



Все каталоги и инструкции здесь: https://splitsystema48.ru/instrukcii-po-ekspluatacii-kondicionerov.html

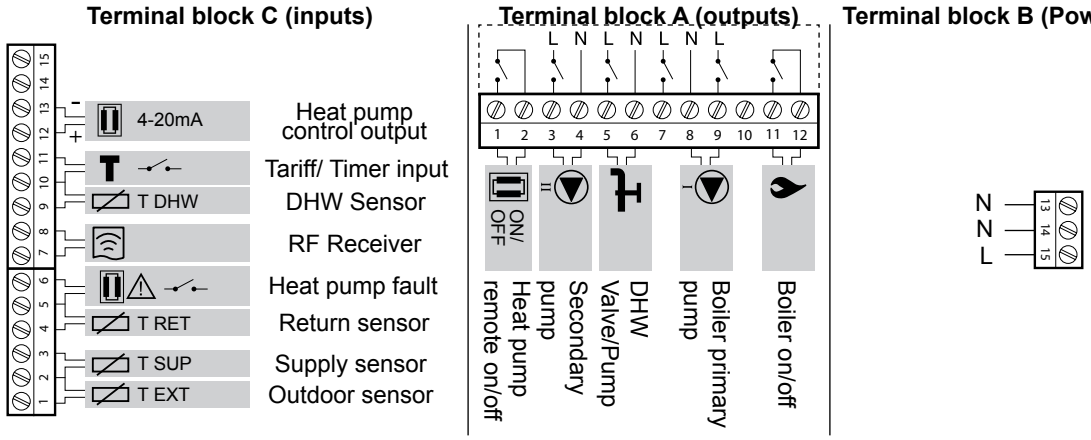


## ◆ Bi-Valent system - parallel operation - mixing loop 'conf 4'

This system is recommended for retrofit (upgrade) applications where an existing gas/oil boiler will be retained to provide the full heating requirements on the coldest days of the year.

- Direct OTC Controlled Heating Loop - Mixing circuit
- Sequence control of boiler and heat pump

● **Important settings**

- Set installer parameter CONF to value 4
- Set P4 (OTC heating curve) according to building/ system

● **Additional settings**

- Boiler control parameters
- Mixing valve control parameters
- Minimum and maximum supply temperatures
- Room temperature compensation
- Frost Protection parameters
- Summer switch-off setting
- Tariff/ Timer input configuration
- To select alternative operation (heat pump or boiler can operate separately, but not at the same time)

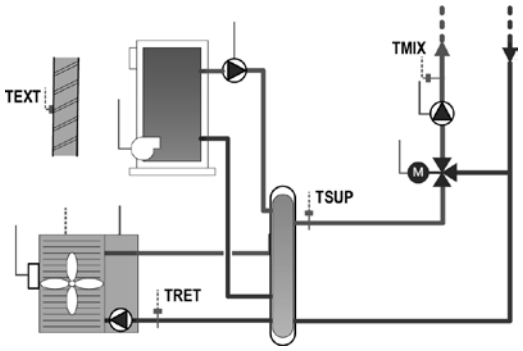


- Heat Pump
- Boiler
- Secondary pump
- Mixing valve
- Optional boiler primary pump

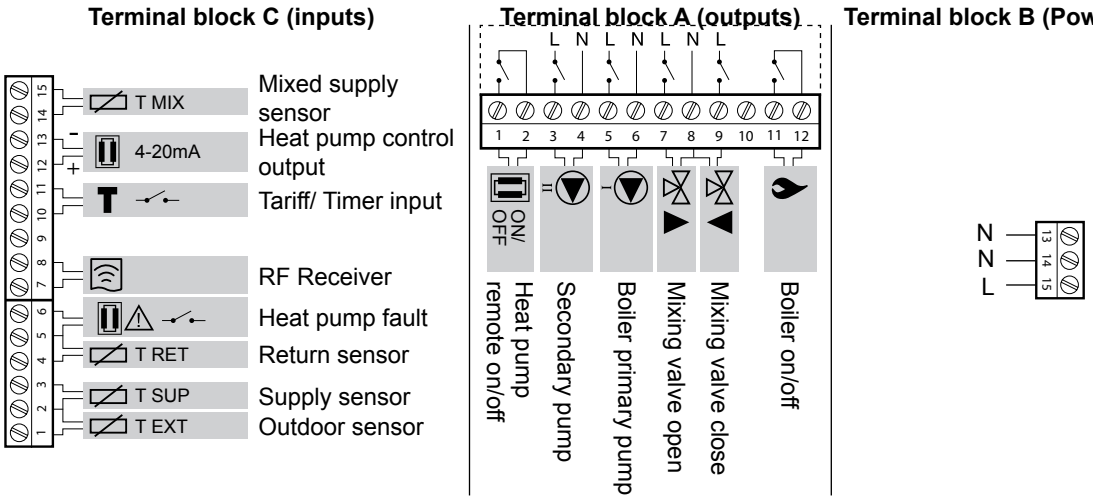




Все каталоги и инструкции здесь: https://splitsystema48.ru/instrukcii-po-ekspluatacii-kondicionerov.html

## ◆ Bi-Valent system - serial operation ‘conf 5’

This system is recommended for retrofit (upgrade) applications where an existing gas/oil boiler will be retained to provide the full heating requirements on the coldest days of the year.

- Direct OTC controlled heating loop
  - Direct loop when heat pump operating on it´s own mixing circuit when boiler operating
- Sequence control of boiler and heat pump
- Optional DHW storage with diverting valve or pump

● **Important settings**

- Set installer parameter CONF to value 5
- Set installer parameter P1 to 0 (no DHW), 1 (DHW valve) or 2 (DHW pump)
- Set P4 (OTC heating curve) according to building/ system

● **Additional settings**

- Boiler control parameters
- Mixing valve control parameters
- DHW setpoint and control parameters
- Minimum and maximum supply temperatures
- Room temperature compensation
- Frost Protection parameters
- Summer switch-off setting
- Tariff/ Timer input configuration

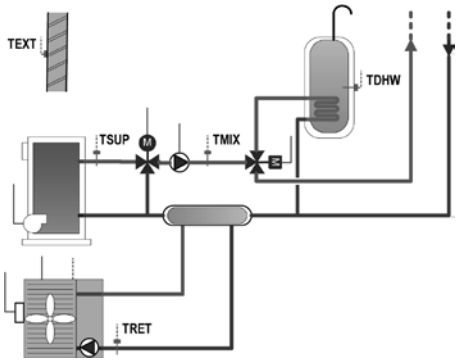


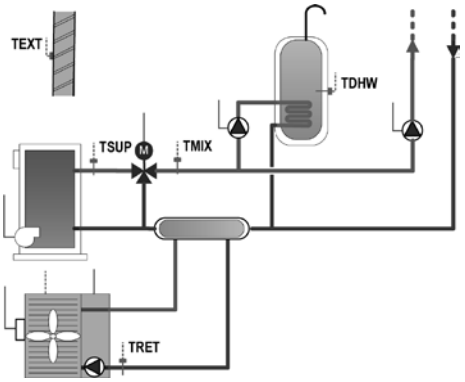


- Heat Pump
- Boiler
- Secondary pump
- Bypass/ Mixing valve
- Optional DHW pump/ valve

**Terminal block C (inputs)**

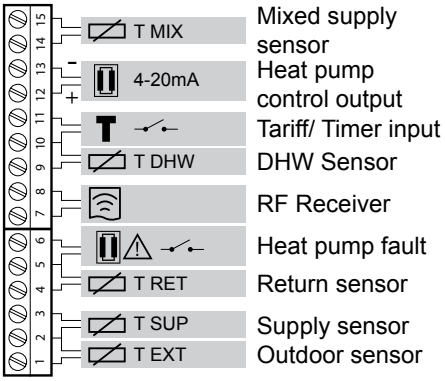


**Terminal block A (outputs)**

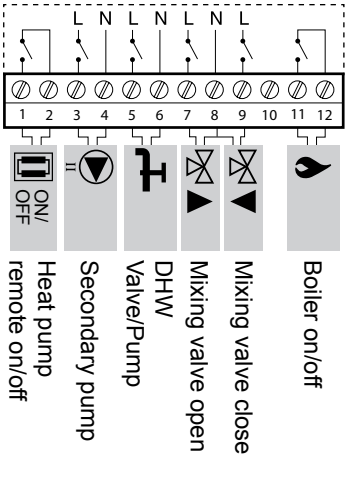


**Terminal block B (Power Supply)**

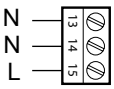




Все каталоги и инструкции здесь: https://splitsystema48.ru/instrukcii-po-ekspluatacii-kondicionerov.html

# 4.18. USER INTERFACE

## 4.18.1. Display

The display of the System Controller is simple to understand and has extra segments to indicate the operating mode, failures and status.

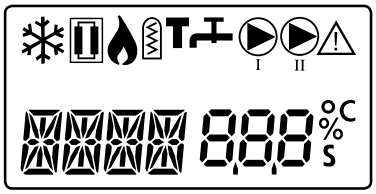


Frost Protection Symbol
Displayed when the frost protection feature is active.

Heat Pump Symbol
Indicates that the Heat Pump is switched on by the controller.

Boiler Symbol
Displayed when the boiler (bi-valent system) is switched on to provide additional heating.

Electric Heater Symbol
Displayed when the electric heater (mono-energetic system) is switched on to provide additional heating.

Tariff/Timer Symbol
Displayed when external tariff/timer blocking function is activated.

DHW Symbol
Displayed when the system is heating the DHW storage tank.

Pump I Symbol
Displayed when the primary boiler pump (bi-valent systems) is running.

Pump II Symbol
Displayed when the secondary pump (if connected) is running.

Fault Symbol
Displayed in case of a fault. The display will show the text “FAUL” and the fault number.

## 4.18.2. Controls

The System Controller has a simple five buttons interface with an user friendly display.

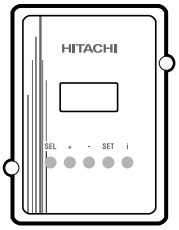


SEL Select button
- Used to leave setting mode.
- Used to cancel a new setting and retain old value.

\+ Increase button
- Used to select the next parameter.
- Used to increase the value of the selected parameter.

\- Decrease button
- Used to select the previous parameter.
- Use to decrease the value of the selected parameter.



Все каталоги и инструкции здесь: https://splitsystema48.ru/instrukcii-po-ekspluatacii-kondicionerov.html

SET Set button
- Used to enter setting mode
- Used to accept new value for a parameter.

i Info button
- Used to enter Operational Data Display mode.
- Used to select next operational data item

Pressing particular combinations of these buttons will allow display or alteration of the various operating parameters.

## 4.19. INSTALLATION CONFIGURATION SETTINGS

The configuration of the System Controller is performed using the 5 buttons on the front cover. Via these buttons, a simple menu structure can be accessed to adjust all the controller parameters.

All menus use the 4 characters in the left of the display to show an abbreviated name, and the three digits in the right for the value. Units are shown in the far right of the display next to the value.

If no button is pressed for 10 minutes, the display will return to the default menu, or the relevant fault code.

### 4.19.1. Reviewing and setting the installer parameters

The System Controller is delivered with a set of pre-programmed parameters to allow a quick start-up procedure. The factory default settings are shown in the table on the next page. Should it be necessary to adjust any of these parameter settings, please refer to the table and follow the instructions below.

To enter Parameter Display mode from the Normal Operation mode, press + and − buttons together for at least one second. The display will show “CONF” to indicate that the System Controller is in Parameter Display mode, and shows the first parameter CONF (Hydraulic Configuration) and its current setting.

1. Use the + and − buttons to move up or down the parameter list according to the table.

2. To change a parameter setting, use the SET button to enter Parameter Setting mode. The value of the parameter will flash to show that it can now be changed. Use the + and − buttons to change the value to the desired setting.

3. To store the parameter setting, press the SET button. The flashing will stop to show the value has been saved. Instead, to cancel the change, and retain the previously stored value, press the SEL button.

4. Continue to change the parameters as required. When finished, or at any time, pressing the i button will return the display to Normal Operation mode.

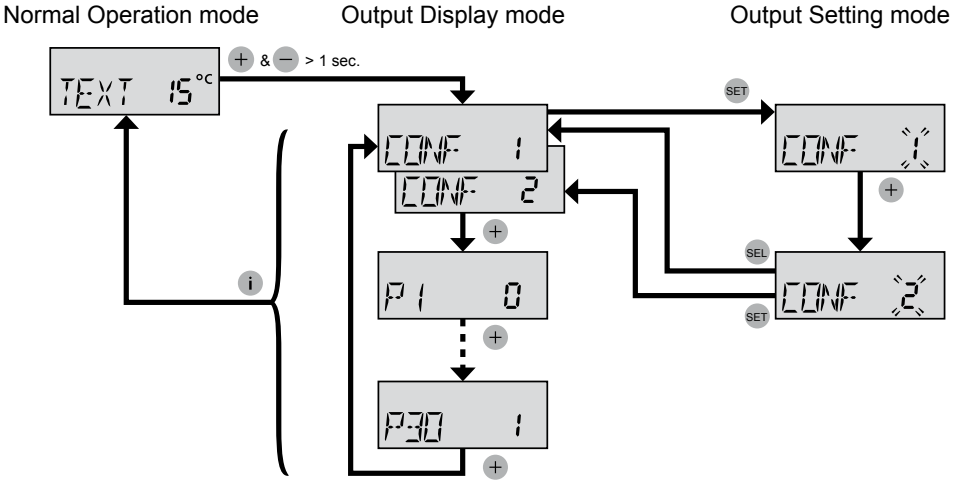




Все каталоги и инструкции здесь: https://splitsystema48.ru/instrukcii-po-ekspluatacii-kondicionerov.html

## 4.19.2. Installer parameter list

| ID | Parameter | CONF | Description | Min | Max | Step | Default | Setting |
|---|---|---|---|---|---|---|---|---|
| CONF | System configuration | 12345 | Set according to the type of hydraulic configuration installed | 1 | 5 | 1 | 3 | |
| P1 | DHW configuration | 123-5 | Set to 0=No DHW, 1=DHW valve, 2=DHW pump | 0 | 2 | 1 | 0 | |
| P2 | Secondary pump | 12--- | Set to 1 if a buffer/hydraulic separator and a secondary pump is used (CONF 1 or CONF 2 only) | 0 | 1 | 1 | 0 | |
| P3 | Pump overrun time | 12345 | Sets how long the pumps run after the heating is switched off. | 1 | 10 | 1 | 2 min. | |
| P4 | OTC heating curve gradient | 12345 | Sets the heating curve for OTC control function | 0.2 | 2.2 | 0.1 | 1.1 | |
| P5 | Minimum supply temperature | 12345 | Sets the minimum supply water temperature for the heating | 5 | 40 | 1 | 15°C | |
| P6 | Zone 1: maximum supply temperature | 12345 | Sets the maximum supply water temperature for the heating (zone 1) | 20 | 55/ 65/ 90* | 1 | 55°C | |
| P7 | Room compensation factor | 12345 | Sets the room temperature influence for the OTC control function | 0 | 5 | 0.5 | 2 | |
| P9 | Actuator run time / mixing valve control | ---45 | Set to the running time of the actuator (see actuator manufacturer's instructions) | 30 | 600 | 10 | 120 s | |
| P10 | "DHW setpoint (not available if p1=0)" | 123-5 | Setpoint for the DHW control function | 45 | 65 | 1 | 45°C | |
| P11 | "DHW differential (not available if p1=0)" | 123-5 | DHW control differential | 1 | 10 | 1 | 5 K | |
| P12 | "DHW supply offset (not available if p1=0)" | 123-5 | Influences how quickly the hot water tank is heated | 1 | 30 | 1 | 10 K | |
| P14 | Minimum outdoor temperature for Heat Pump Operation. | --345 | Heat Pump will be disabled below this temperature (Boiler works on its own). OFF means the Heat Pump is always enabled. | -25 | 20, then OFF | 1 | -20°C | |
| P15 | Maximum outdoor temperature for boiler/ electric operation. | -2345 | Boiler / Electric heater will be disabled above this temperature (Heat Pump works on its own). OFF means the boiler/electric heater is always enabled. | -20 | 20, then OFF | 1 | 0°C | |
| P17 | Boiler minimum on time | --345 | Sets the minimum ON time of the boiler to reduce inefficient short-cycling | 1 | 30 | 1 | 2 min | |
| P18 | Boiler minimum OFF time | --345 | Sets the minimum OFF time of the boiler to reduce inefficient short-cycling | 1 | 30 | 1 | 5 min. | |
| P19 | Waiting time for boiler/ electric heater | -2345 | Sets the minimum time the controller will wait (after the heat pump is switched on) before using the boiler or electric heater | 1 | 90 | 1 | 30 min. | |
| P21 | Minimum supply setpoint during frost protection | 12345 | Sets the minimum supply water temperature when the frost protection function is active | 10 | 35 | 1 | 20 °C | |
| P22 | Frost protection activation temperature | 12345 | Sets the outdoor temperature below which the frost protection function will activate. | -20, then OFF | 5 | 1 | 2°C | |
| P23 | Zone2: maximum supply temperature | 12345 | Sets the maximum supply water temperature for the heating (zone 2 extension) | 20 | 55/ 65/ 90* | 1 | 50°C | |
| P24 | Configuration of tariff/ timer input | 12345 | The sets the meaning of the digital input "Tariff/Timer" | 0 | 4 | 1 | 4 | |
| P25 | Start screed-drying function | 12345 | Set to 1 to start immediately the underfloor screed-drying function | 0 | 1 | 1 | 0 | |
| P26 | Summer switch-off temperature | 12345 | Sets the daily average outdoor temperature above which the heating will be switched off | 10 | 25, then OFF | 1 | 20°C | |
| P27 | "Maximum allowed DHW loading time (not available if p1=0)" | 123-5 | Sets the maximum time allowed for DHW loading. After this time, if the DHW setpoint is not achieved, the controller will nevertheless return to heating | 1 | 12 | 1 | 1.5 hr | |
| P30 | No-load function enable | 12345 | Disables the heating in Zone 1 if the OTC calculated supply setpoint falls below the room temperature (or room setpoint, if no room temp) | 0 | 1 | 1 | 1 | |
| P31 | Heat pump sensor offset | 12345 | Compensates for differences in temperature measurement between the heat pump and the supply sensor. | 0 | 5 | 1 | 3°C | |
| P32 | Supply-return difference control limit | -2345 | Control parameter to help maximise running time of the heat pump and minimise use of the electric heater or boiler. | 1, then OFF | 10 | 1 | 3°C | |





Все каталоги и инструкции здесь: https://splitsystema48.ru/instrukcii-po-ekspluatacii-kondicionerov.html

| ID | Parameter | CONF | Description | Min | Max | Step | Default | Setting |
|---|---|---|---|---|---|---|---|---|
| P33 | Return temperature limit offset | -2345 | Control parameter to prevent electric heater use when the return temperature is too high for heat pump operation. | 1, then OFF | 15 | 1 | OFF | |
| P34 | DHW electric heater waiting time (not available if P1=0) | 12--- | Sets the time to wait after starting to heat the DHW tank before enabling the special output for “DHW electric heater enable”. | 0 | 60 | 1 | 45 min. | |
| P35 | Mixing valve opening delay time | ---45 | Or solid fuel or oil fired boiler. Prevents the mixing valve opening for the set delay time to allow the boiler to heat up. | 1, then OFF | 20 | 1 | OFF | |

***NOTE***

- *Operational data shown depends on the system configuration (CONF) setting.*
- *Zone 1 is the heating loop controlled by the System Controller.*
- *Zone 2 is the heating loop controlled by the Extension Controller.*

***** Maximum supply temperature limit depends on configuration

CONF 1: limit = 55°C
CONF 2: limit = 65°C
CONF 3,4,5: limit = 55°C

# 4.20. SYSTEM TESTING

## 4.20.1. System start-up

After the installation of sensors and outputs, the **System Controller** controller can be started for the first time.

Switch on the mains power supply.

The controller will be initialised with the default configuration stored in the internal memory.

A test procedure is performed to check the validity of the data in the internal memory, and the various inputs are tested. All sensors and communications devices are automatically detected. All faults and warnings are automatically reset and the software version is displayed for reference.

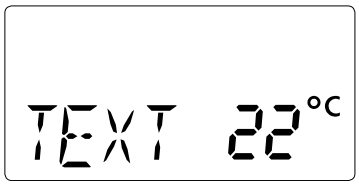


## 4.20.2. SYSTEM TEST

Once the system has been installed, it is recommended that the following tests are carried out:

1. Check that you have selected the correct configuration, and that the necessary installation parameters have been set.

2. Check the wiring of the inputs and outputs. Use the procedure in 7.3 to view the temperature sensor values. Using the procedure in 4.20.4, it is possible to manually override the outputs to test the system operation.

3. Check that the Room Unit is communicating with the RF Receiver. To do this, change the temperature setpoint on the Room Unit to the maximum or minimum value and check that the heat pump reacts appropriately



Все каталоги и инструкции здесь: https://splitsystema48.ru/instrukcii-po-ekspluatacii-kondicionerov.html

## 4.20.3. REVIEWING THE OPERATIONAL DATA

The table below shows the values that are available to be viewed during Normal Operation mode. These can be shown by pressing the i button

| | Abbr. | Operational Data | Units | CONF |
|---|---|---|---|---|
| Sensor Temperatures | TEXT | Outdoor temperature | °C | 12345 |
| | TSUP | Supply water temperature | °C | 12345 |
| | TMIX | Zone1: Mixed supply temperature | °C | ---45 |
| | TRET | Return temperature | °C | 12345 |
| | TDHW | DHW temperature | °C | 123-5 |
| | TR1 | Room temperature | °C | 12345 |
| | V | Mixing valve position | - | ---45 |
| | FAUL | Fault status | - | 12345 |
| Controller Setpoints | SSUP | Overall system supply setpoint | °C | 12345 |
| | S1 | Zone1: supply setpoint | °C | 12345 |
| | SR1 | Zone1: room setpoint | °C | 12345 |
| | S2 | Zone2: supply setpoint | °C | 12345 |
| | DSET | DHW setpoint | °C | 123-5 |
| | SDHW | DHW supply setpoint | °C | 123-5 |

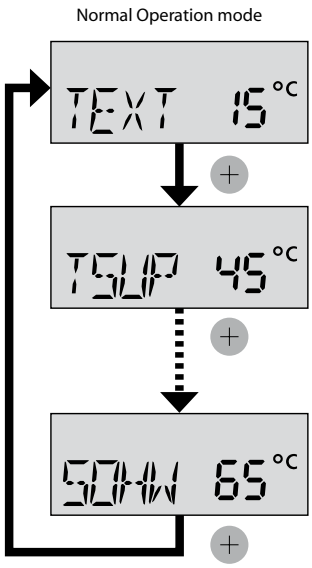


| | NOTE |
|---|---|
| | - *Operational data shown depends on the system configuration (CONF) setting.*<br>- *Zone 1 is the heating loop controlled by the System Controller.*<br>- *Zone 2 is the heating loop controlled by the Extension Controller.* |

4

## 4.20.4. MANUALLY OVERRIDING THE OUTPUTS

This feature allows the status of the outputs to be changed in order to test the electrical connections.

To enter Output Display mode from Normal Operating mode, press the SEL and SET buttons together for at least one second. The display will show “HPS” to indicate that the controller is in Output Display mode and shows the first output “HPS” and its current status.

1. Use the + and − buttons to move up or down the output list according to the table.

2. To change an output, use the SET button to enter Output Setting mode. The value of the output will flash to show that it can now be changed. To change the output value, use the + and − buttons.

3. To save the output setting, press the SET button. The flashing will stop to show the value has been saved, and the letter F (Fixed) will appear to show that the output is being overridden. Note that the value must be saved before it takes effect. Instead, to cancel the change, and retain the previously stored value, press the SEL button.

To cancel the manual override of an output, enter the Output Setting mode and then press + and − together for one second. The “F” disappears from the display to show that the output is no longer overridden.

At any time, pressing the i button will return the display to Normal Operation mode.

Please refer to the electrical wiring connections to identify which relays should be connected to which output for a particular system configuration



Все каталоги и инструкции здесь: https://splitsystema48.ru/instrukcii-po-ekspluatacii-kondicionerov.html

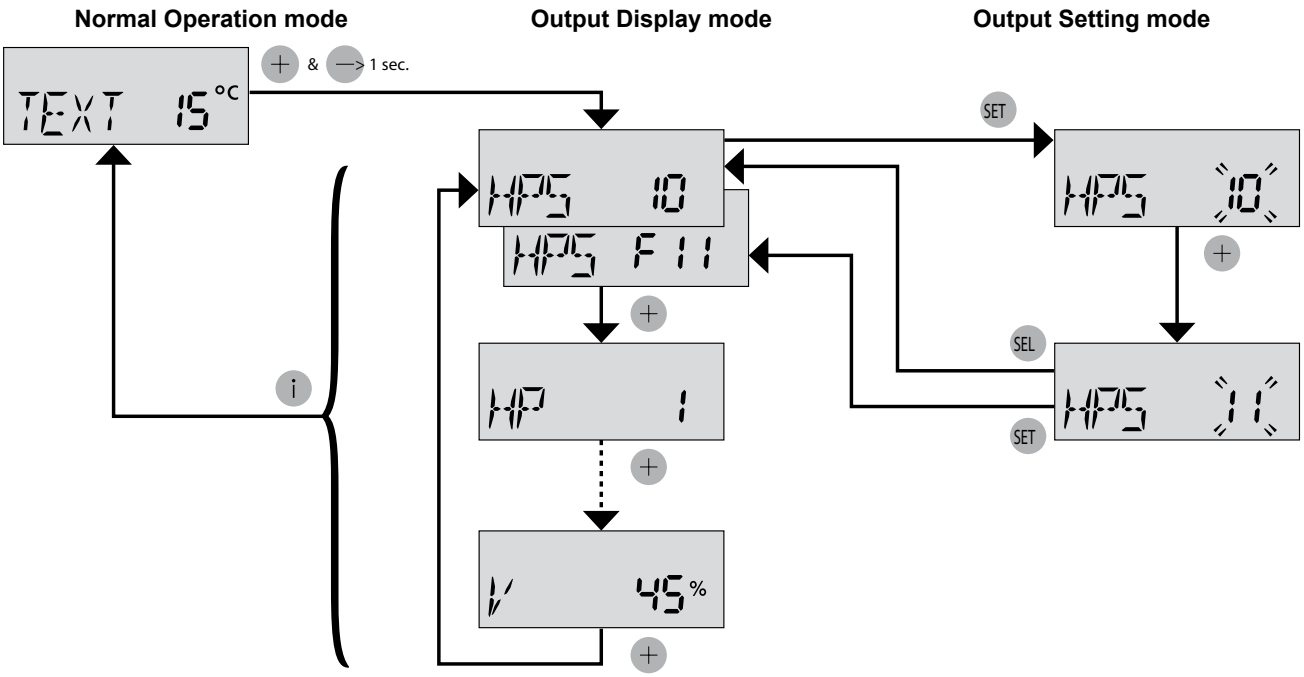


| ID | Output | Min | Max | CONF |
|---|---|---|---|---|
| HPS | Heat Pump setting (mA) | 2 | 20 | 12345 |
| HP | Heat Pump remote on/off | 0 | 1 | 12345 |
| PO2 | Secondary pump (not displayed if P2=0) | 0 | 1 | 12345 |
| DHWV | DHW valve/pump (not shown if P1=0) | 0 | 1 | 123-5 |
| EHS1 | Electric heater output 1 | 0 | 1 | -2--- |
| EHS2 | Electric heater output 2 | 0 | 1 | -2--- |
| DHWE | DHW electric heater enable (not shown if P1=0) | 0 | 1 | 12--- |
| PO1 | Boiler pump | 0 | 1 | --34 |
| BLR | Boiler on/off | 0 | 1 | --345 |
| V | Mixing valve position (%) | 0 | 99 | ---45 |
| *Operational data shown depends on the system configuration (CONF) setting.* | | | | |

# 4.21. EXPANDING THE SYSTEM

## 4.21.1. Additional mixing zone

The system controller is designed so that it can be expanded when necessary to control heating systems with an additional mixed heating zone. The extension controller will control a mixing circuit, consisting of a mixing valve and pump as shown below. It is possible to use one room unit for the entire system, or have one room unit in each heating zone with separate time programmes.

Installation instructions are included with the extension controller.



Все каталоги и инструкции здесь: https://splitsystema48.ru/instrukcii-po-ekspluatacii-kondicionerov.html

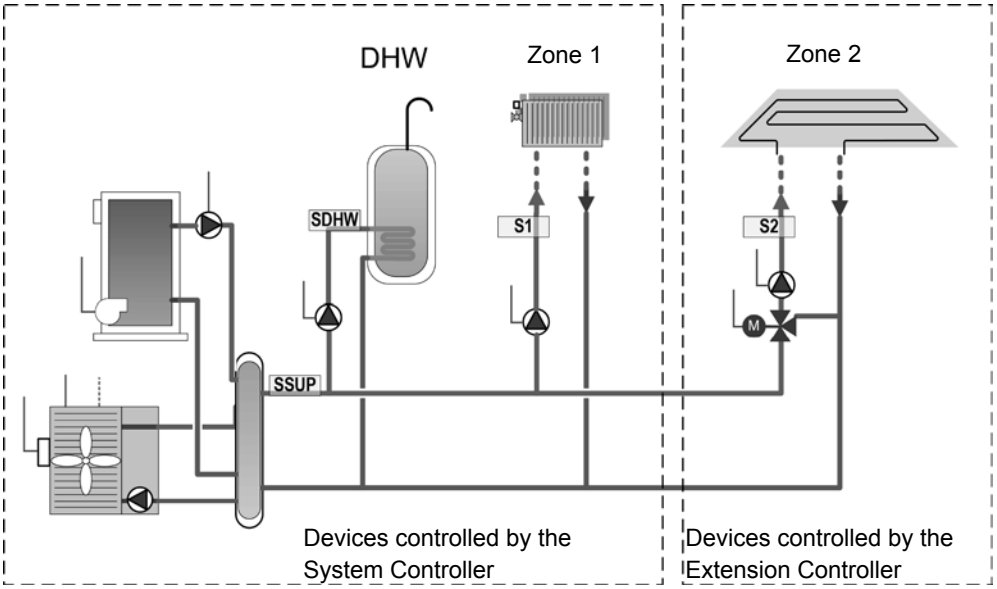


### 4.21.2. Binding RF components together

The Room Unit and RF receiver included in the system pack are already factory configured to work together. If either of these units have to be replaced, please follow the instructions below for the method of binding RF components together.

To enter the RF Binding procedure, press and hold the button on the RF Receiver for 5 seconds. The red LED will begin to flash.

When binding the RF Receiver to the Room Unit, the System Controller display will show a flashing “ZONE 1”, meaning that the system will bind to the first heating zone by default. Zone 1 is the zone controlled directly by the System Controller.

To bind Zone 2 (the extension system), press the + button on the System Controller. “ZONE 2” will be displayed, and the RF system will be bound to that zone. The bound zone can be changed by following the re-binding procedure on the RF Receiver/Room Unit and adjusting the zone selected on the System Controller display.

## 4.22. SYSTEM MMI PACK (ROOM UNIT AND RF RECEIVER)

### 4.22.1. Room Unit installation guide

#### 4.22.1.1. Description

The Room Unit communicates with the RF Receiver on an 868MHz Radio Frequency (RF) band to control the Heat Pump System Controller. Neither product will communicate with other RF products that use different frequencies or communication protocols.

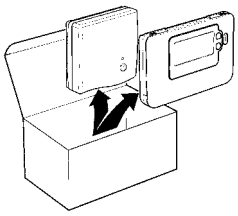



Все каталоги и инструкции здесь: https://splitsystema48.ru/instrukcii-po-ekspluatacii-kondicionerov.html

| | NOTE |
|---|---|
| - | *The RF link between the Room Unit and RF Receiver in system packs is pre-configured at the factory and therefore should be installed at the same site. This makes the installation process fast and easy, but if products from individual system packs are separated, or mixed with other pre-configured system packs during installations please refer to the section Binding / Rebinding procedure to bind the desired units together and allow them to communicate with each other.* |

### 4.22.1.2. Installation information

As these products communicate using RF technology special care must be taken during installation. The location of the RF components as well as the building structure may influence performance of the RF system. To assure system reliability, please review and apply the information given below.

Within a typical residential building the two products should communicate reliably within a 30m range. It is important to take into consideration that walls and ceilings will reduce the RF signal. The strength of the RF signal reaching the RF Receiver depends on the number of walls and ceilings separating it from the Room Unit, as well as the building construction - the diagram below illustrates an example of typical signal strength reduction. Walls and ceilings reinforced with steel or plasterboard walls lined with metal foil reduce the RF signal significantly more.

Once a position is selected for the Room Unit this can be checked using the RF Communication Test mode as described in section Locating the Room Unit. If the position is unsuitable the RF Receiver will not respond and an alternative position for the Room Unit must be selected.

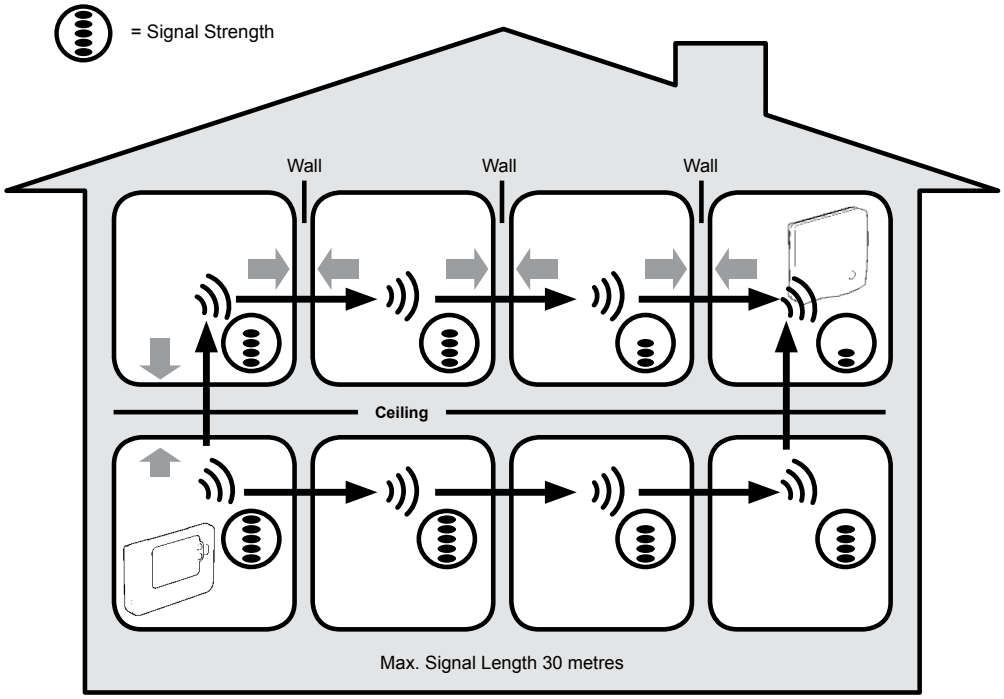


Typical example of building fabric signal losses

### 4.22.1.3. Installing the System MMI Pack

Please follow the illustrations and information below in sequence to install the RF Receiver and Room Unit correctly. To enable special features and see what other system options are available refer to section Installer Mode.



Все каталоги и инструкции здесь: https://splitsystema48.ru/instrukcii-po-ekspluatacii-kondicionerov.html

### 4.22.1.4. Installing the RF Receiver

| | NOTE |
|---|---|
| - | *The RF Receiver contains no user serviceable parts. It should be opened and installed by qualified installer only.* |

| | CAUTION |
|---|---|
| - | *Static electricity. Malfunction. Do not touch the circuit board.* |

| | |
|---|---|
| 1 | 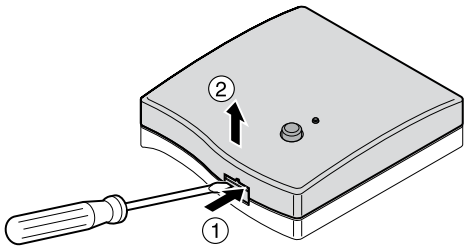  |
| 2 | 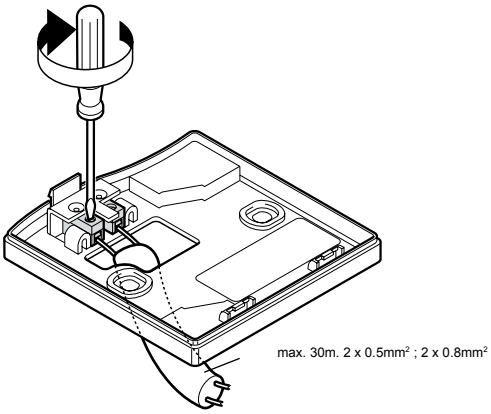  |
| 3 | 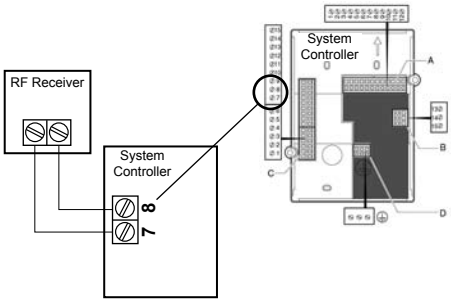  The RF Receiver can be connected to other Open therm appliances. For the correct wiring connections refer to the installation manual of the Open therm device. |
| 4 | 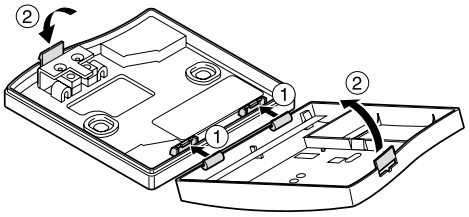  |

| | NOTE |
|---|---|
| - | *All wiring must be in accordance with IEE regulations.* |
| - | *Observe ambient temperature and current limits (see the RF Receiver wiring label).* |



Все каталоги и инструкции здесь: https://splitsystema48.ru/instrukcii-po-ekspluatacii-kondicionerov.html

## 4.22.2. Installing the Room Unit

### 4.22.2.1. Power up

**Installing the Batteries:**

**a.** Lift up the front cover of the Room Unit to reveal the battery cover and product controls.
**b.** Remove the battery cover by pressing down and sliding out.
**c.** Insert the 2 x AA LR6 Alkaline Batteries supplied with the Room Unit, ensuring the correct orientation.
**d.** After a short pause the Room Unit will display information on the screen and is now ready for use.
**e.** Replace the battery cover by sliding it firmly back into the front of the Room Unit.

**Setting the date and time:**

| | |
|---|---|
| **a.** Press the button to begin setting the date. When you set the date for the first time after the batteries are inserted, the display will show:<br><br>Press the or buttons to set the current day of the month (e.g. d 01 = 1st day of the month) then press the green OK button to confirm. | d01 |
| **b.** Press the or buttons to set the current month of the year (e.g. m 01 = January) then press the green OK button to confirm. | m01 |
| **c.** Press the or buttons to set the current year (e.g. yr 07 = 2007) then press the green OK button to confirm.<br><br>The date is now stored and the Day Indicator will be displayed under the current day of the week (e.g. 1 = Monday, 2 = Tuesday, etc.) | yr 01 |
| **d.** Use the or buttons to set the correct time then press the green OK button to confirm. Each press of the buttons will change the time by one minute and holding them down will change the time slowly at first and get progressively quicker.<br><br>**NOTE**<br>- *If this mode is entered accidentally then press the , or buttons to exit.* | 12:00 AM OK? |

### 4.22.2.2. RF Communication check (test mode)

To check the RF communication, hold the **Room Unit** about 2-3 metres from the installed RF Receiver. Set the **Room Unit** to off by pressing the button. then press the and buttons together with the button for 3 seconds. The unit will display “test” and it will send test signals to the **RF Receiver**. If the test signals are received the LED on the RF Receiver will flash between 1 and 5 times. The number of flashes indicates the strength of the radio signal. The higher the number of flashes, the stronger the signal is.

| | |
|---|---|
| | **NOTE** |
| - | *If the LED does not flash or if you are installing a replacement RF Receiver or Room Unit, follow the procedures described in section Binding / Rebinding Procedure.* |



Все каталоги и инструкции здесь: https://splitsystema48.ru/instrukcii-po-ekspluatacii-kondicionerov.html

#### 4.22.2.3. Locating the Room Unit

While still in the Test Mode, the Room Unit should be located taking the following into consideration and reviewing the illustrations below:

1. Find a suitable location where the signal transmission is reliable. Reliable transmission is indicated when the RF Receiver is flashing the green LED every 6 seconds.

2. Install the **Room Unit** EITHER on the wall using the wall bracket OR attach the optional table stand as shown in below.

3. Exit the Test Mode by pressing the Ⓐ or ⏻ button.

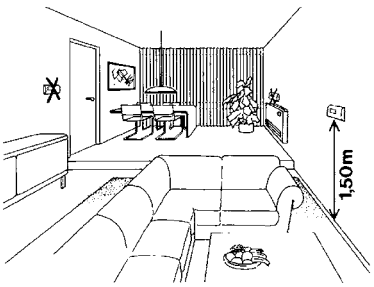


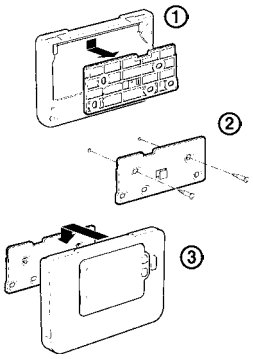


**Wall bracket**

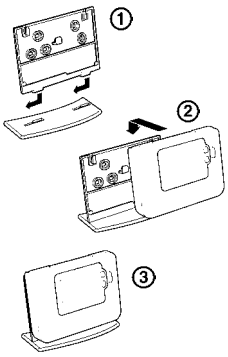


**Table stand**

- The Room Unit should be installed in an open space for best performance as it is a radio frequency device.
- Leave at least 30cm distance from any metal objects including wall boxes and at least 1 meter from any other electrical equipment as radio, TV, PC etc.
- Do not mount onto metal wall boxes.
- It is recommended that the RF Receiver is fully installed.

4

## 4.22.3. Communication loss

In the event of an RF communications loss, the LED on the RF Receiver will indicate which type of fault has occurred.

- If there is a communications fault between the RF Receiver and the Room Unit, then the LED on the RF Receiver will flash red for 0.1 sec ON every three seconds.
- If there is a fault in communications between the boiler or System Controller, then the LED on the RF Receiver will flash 3 times quickly and then be off for three seconds.
- If there is more than one Room Unit installed, as in multi-zone systems for example, and communications is lost with one zone, then the red LED on the RF Receiver will flash two times quickly and then be off for two seconds.
- If there is more than one Room Unit installed, as in multi-zone systems for example, and communications is lost with both zones, then the red LED on the RF Receiver will flash once for 0.1 sec ON, and 0.9 sec OFF.

Once the faulty device has been identified, replace as necessary and follow the re-binding procedure as described in section Binding / Rebinding Procedure.



Все каталоги и инструкции здесь: https://splitsystema48.ru/instrukcii-po-ekspluatacii-kondicionerov.html

## 4.22.4. Installer mode

Installer Mode is used to alter the system settings for specific applications, to use the special features of the Room Unit in a different way or to alter the factory preset parameters. Parameters are divided into two groups:

- Category 1 parameters – Room Unit Setup

- Category 2 parameters – System Setup. (These are all listed in section Installer Parameters Table.).

### 4.22.4.1. Entering installer mode

| | | |
|---|---|---|
| ❶ | 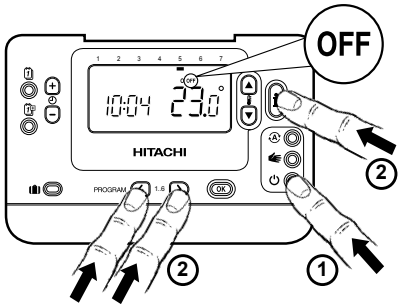 | Press the ⏻ button.<br>Press and hold the button and the PROGRAM ‹ & › buttons together. |
| ❷ | 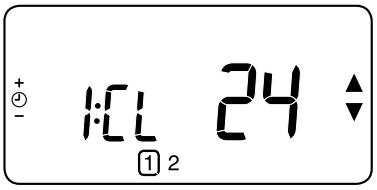 | The unit will display the first parameter of installer parameter group **category 1** (from Parameter n.1 to n.19) as shown |
| ❸ | 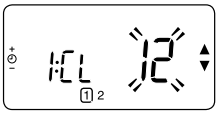 | Press the ▲ or ▼ to change factory setting.<br>The display will flash indicating that a change has been made. |
| ❹ | 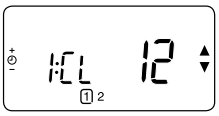 | Press the green OK button to confirm the change.<br>The display will stop flashing.<br>(Continues in the next page) |
| ❺ | 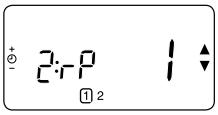 | Press ⏲ ⊕ button to go to the next parameter. |
| ❻ | Press the › button to go to Installer parameter group **category 2** (2) (from Parameter nº 4 to nº 14) | |
| ❼ | To exit the installer mode press the Ⓐ **or** ✋ buttons. | |

### 4.22.4.2. Fail-Safe mode setup

The fail-safe mode defines the system status if the RF communication is lost (e.g. when the **Room Unit** stops communicating due to discharged batteries). If the system is a direct (radiator one), then the factory setting will make the system revert to a set point of 10°C for frost protection. If indirect loops are added, the system will continue to operate at the last communicated setpoint.



Все каталоги и инструкции здесь: https://splitsystema48.ru/instrukcii-po-ekspluatacii-kondicionerov.html

### 4.22.4.3. Using the Room Unit for specific applications

The Room Unit is a versatile controller that can be used to control many different applications. Please note that when the Room Unit is installed in conjunction with a System Controller, the functionality will differ to that when installed with a standard boiler system. Most of the functions shown below will be controlled by the System Controller and be set within its parameters. Therefore, some of the system parameters within the Room Unit menu will not apply. Please also note other changes to the setting of the optimisation and proportional band settings as shown in the the next tables.

| | ***NOTE*** |
|---|---|
| - | *In order for the Room Unit to send the heating demand signal to the RF Receiver, it is essential that the Category 2 parameter 8:Su is set to the correct value (see Installer Parameters Table, Category 2 – System Settings). Failure to do this will mean that the heating system will not respond to changes in the setpoint on the Room Unit. Under these circumstances the system will operate with no input from the Room Unit and may not therefore provide adequate temperature control.* |

### 4.22.4.4. Using the special features of the Room Unit

| Special feature | Description: | Enable/Disable |
|---|---|---|
| Heating operation | (This feature is not available with the system)<br>This product can be used for heating applications. You can independently modify the profile. | To enable: Set parameter 4:HC (category 2) to 1. |
| Summer/winter auto time change | This feature moves time automatically on the last Sunday of March and the last Sunday of October. The feature is factory enabled. | To enable: Set parameter 3:tC (category 1) to 1. |
| Temperature offset | If the Room Unit is located in a particularly hot/cold location for reliable signal transmission reasons then the measured/displayed temperature can be adjusted by +/- 3°C. This is useful if the homeowner wants the reading to match another appliance temperature display. | Set parameter 12:tO (category 1) to the required offset value. |
| Upper/lower temperature limit | The normal upper temperature limit of 35°C can be reduced to 21°C to save the homeowner energy. The normal lower limit of 5°C can be increased up to 21°C to protect inhabitants from cold. | Set parameter 6:uL (category 1) to the desired upper limit.<br>Set parameter 7:LL (category 1) to the desired lower limit. |





Все каталоги и инструкции здесь: https://splitsystema48.ru/instrukcii-po-ekspluatacii-kondicionerov.html

## 4.22.5. Installer parameters table

### 4.22.5.1. Category 1 - Room Unit settings

| Parameter | Parameter No. | Factory Default Setting | | Optional Setting | |
|---|---|---|---|---|---|
| Category 1 Parameters – Room Unit Settings | | | | | |
| | | Display | Description | Display | Description |
| AM-PM / 24hr Display | 1:CL | 24 | 24 hr clock display format | 12 | 12 hr – AM/PM clock display format |
| Reset Time/ Temp Program | 2:rP | 1 | Time / Temp profile set to factory default Changes to 0 when one of the time/temp profiles are changed | 0 | Time / Temperature are as programmed<br><br>To restore the factory profile set to 1 |
| Auto Summer/ Winter Time Change | 3:tC | 1 | Auto Summer/ Winter Time Change Enabled | 0 | Auto Summer/Winter Time Change Disabled |
| LCD Backlighting | 5:bL | 1 | Backlighting Enable | 0 | Backlighting Disabled |
| Upper Temp Limit | 6:uL | 35 | 35°C Upper Temp. Limit | 21 to 34 | 21°C to 34°C adjustment in 1°C steps |
| Lower Temp Limit | 7:LL | 5 | 5°C Lower Temp. Limit | 5 to 21 | 6°C to 21°C adjustment in 1°C steps |
| Optimisation Note: This parameter will not function with the System Controller. | 8:OP | 0 | Optimisation Disabled | 1 | Optimisation Enabled DO NOT CHANGE |
| Temperature Offset | 12:tO | 0 | No temperature offset | -3 to +3 | -3°C to +3°C adjustment in 0.1°C steps |
| Proportional Band Width Note: This function is for use with the extension system only. It will not function with the System Controller alone | 13:Pb | 1.5 | Proportional band of 1.5 degrees | 1.6 to 3.0 | 1.6°C to 3.0°C adjustment in 0.1°C steps |
| Reset Parameters to Factory Defaults | 19:FS | 1 | All settings at factory defaults Changes to 0 when one of the parameter is changed | 0 | Settings are as modified above<br><br>To restore the factory profile set to 1 |

***NOTE***

- *Remember to always press the green OK button to confirm that you want to store your new Installer Set-Up setting. To exit the Installer Mode press the A or button.*



Все каталоги и инструкции здесь: https://splitsystema48.ru/instrukcii-po-ekspluatacii-kondicionerov.html

### 4.22.5.2. Category 2 - System settings

| | NOTE |
|---|---|
| - | *To ensure correct heat pump system operation, parameter "8:Su" must be set correctly. See note in section Using the Room Unit for Specific Applications.* |

| Parameter | Parameter No. | Factory Default Setting | | Optional Setting | |
|---|---|---|---|---|---|
| **Category 2 Parameters – System Settings (press the › button to access this category)** | | | | | |
| Heat/Cool selection enable / disable | 4:HC | 0 | Disabled | 1 | Enabled DO NOT CHANGE |
| Room Temperature Sensor Use | 8:Su | 0 | Programmer and room compensation unit | 1 | Programmer only. Transmits demand and room setpoint (no temperature displayed) |
| Maximum Flow Setpoint (extension systems only) | 11:uF | 55 | 55°C Maximum Flow Temp. | 0 to 99 | 0°C to 99°C adjustment in 1°C steps |
| Minimum Flow Setpoint (extension systems only) | 12:LF | 15 | 15°C Minimum Flow Temp. | 0 to 50 | 0°C to 50°C adjustment in 1°C steps |
| Mixing Value Run Time (extension systems only) | 13:Ar | 150 | 150 seconds | 0 to 240 | 0 to 240 sec. adjustment in 1sec steps |
| Pump Overrun Run Time (extension systems only) | 14:Pr | 15 | 15 minutes | 0 to 99 | 0 to 99 mins adjustment in 1min steps |

| | NOTE |
|---|---|
| - | *Remember to always press the green OK button to confirm that you want to store your new Installer Set-Up setting. To exit the Installer Mode press the A or button.* |

## 4.22.6. Binding / Rebinding procedure

The binding operation described below is required if:

- Any of the system components (Room Unit or RF Receiver) are replaced.
- The RF Receiver has incorrect or no binding data stored (e.g. when pre-bound system pack components have been mismatched).

| | NOTE |
|---|---|
| - | *During the binding procedure keep approximately 1m distance between the Room Unit and the RF Receiver.* |





Все каталоги и инструкции здесь: https://splitsystema48.ru/instrukcii-po-ekspluatacii-kondicionerov.html

To bind/rebind:

1. Hold button on RF Receiver for 15 seconds. LED will flash red 0.1 sec ON, and 0.9 sec OFF.
2. Hold button on RF Receiver for 5 seconds. LED will flash red for 0.5 sec ON, and 0.5 sec OFF.
3. Press the ⏻ button on the Room Unit.
4. Hold 🌡, ▲, ▼ and ‹ buttons for 2 seconds. Display will show “InSt CO”. The boiler and RF signal icons will be displayed.
5. Press the green OK button.
6. When Red LED on the RF Receiver goes off, the devices are bound.
7. If binding is unsuccessful, then the LED will stay on. In this case, move the Room Unit and repeat the procedure from the beginning.
8. The LED on the RF Receiver will flash green every 10 seconds to indicate that the device is live.
9. Now go to Section 2. Installing the System MMI Pack to setup the system.

## 4.22.7. Room Unit user guide

- **Description**

The Hitachi programmable wireless room unit is designed to control your heating system efficiently, providing comfortable temperatures when you are at home and energy savings when you are away. The following instructions explain how to program and use the Hitachi room unit to provide the highest home comfort with a minimum cost.

- **Features**
  - Ergonomic user interface featuring an ‘OK-button’.
  - Large LCD (Liquid Crystal Display) Screen with backlight.
  - 7-day heating program to match your lifestyle, whilst maximising energy savings.
  - 6 independent temperature levels per day (from 5°C to 35°C).
  - Holiday button saves energy by letting you reduce the temperature for 1 to 99 days.
  - Built-in Memory holds the user program indefinitely.
- **Controls layout**



Все каталоги и инструкции здесь: https://splitsystema48.ru/instrukcii-po-ekspluatacii-kondicionerov.html

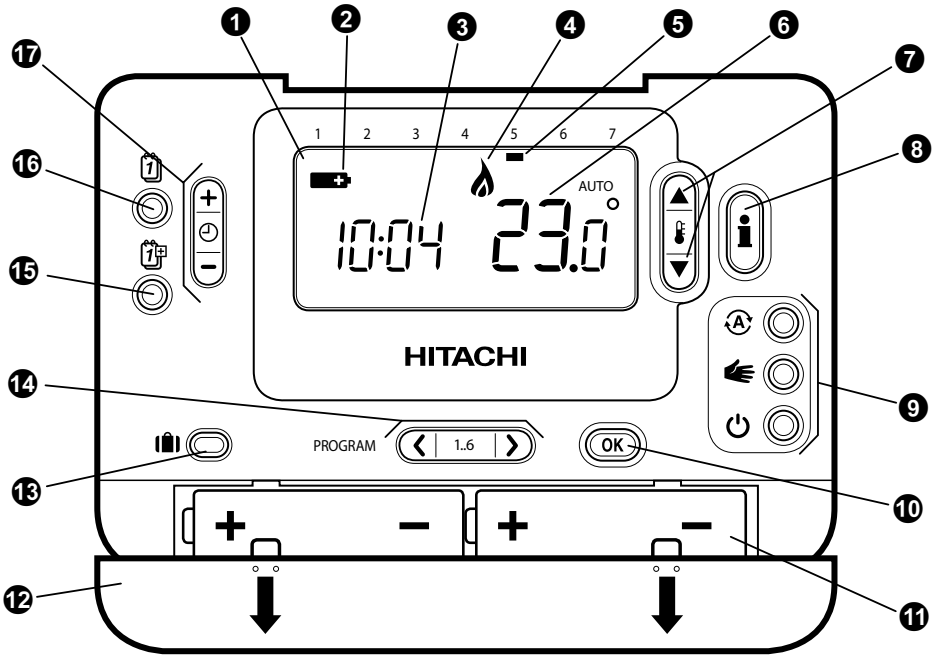


| | | | | | |
|---|---|---|---|---|---|
| 1 | LCD screen | 7 | Temperature change buttons | 13 | Holiday function button |
| 2 | Battery low indicator | 8 | Temperature enquiry button | 14 | Program buttons |
| 3 | Time display | 9 | Operating mode buttons | 15 | Copy day button |
| 4 | Burner on indicator | 10 | Green OK button | 16 | Set date/Day button |
| 5 | Day indicator | 11 | Battery compartment | 17 | Time change buttons |
| 6 | Temperature display | 12 | Battery cover | | |

4

### 4.22.7.1. Setting-up

This section shows you how to setup and run the Hitachi room unit in 3 simple steps:

**STEP 1: Installing the batteries**

| | NOTE |
|---|---|
| - | *Please follow the instructions in this section only if the Hitachi room unit screen is blank (no symbols or digits are displayed). If the room temperature is already displayed move on to Step 2: Setting the date and time.* |

To install the batteries:

**a.** Lift up the front cover of the Hitachi room unit to reveal the battery cover and product controls.

**b.** Remove the battery cover by pressing down and sliding out.

**c.** Insert the 2 x AA LR6 Alkaline Batteries supplied with the Hitachi room unit, ensuring the correct orientation (see ‘Controls Layout’).

**d.** After a short pause the Hitachi room unit will display information on the screen and is now ready for use.

**e.** Replace the battery cover by sliding it firmly back into the front of the Hitachi room unit.



Все каталоги и инструкции здесь: https://splitsystema48.ru/instrukcii-po-ekspluatacii-kondicionerov.html

**STEP 2: Setting the date and time**

To set the Date and Time:

**a.** Press the button to begin setting the date.

**b.** Press the or buttons to set the current day of the month (e.g. d01 = 1st day of the month) then press the green OK button to confirm.

**c.** Press the or buttons to set the current month of the year (e.g. m01 = January) then press the green OK button to confirm.

**d.** Press the or buttons to set the current year (e.g. yr08 = 2008) then press the green button to confirm. The date is now stored and the Day Indicator will be displayed under the current day of the week (e.g. 1 = Monday, 2 = Tuesday, etc.)

**e.** Use the or buttons to set the correct time then press the green OK button to confirm. Each press of the buttons will change the time by one minute and holding them down will change the time slowly at first and get progressively quicker.

| | ***NOTE*** |
|---|---|
| - | *If this mode is entered accidentally then press the , or buttons to exit.* |

**STEP 3: Running the built-in heating program**

The Hitachi room unit is now ready for operation. Press the button and the built-in heating program will start running.

| | ***NOTE*** |
|---|---|
| - | *The built-in heating program has been designed to provide normal comfort requirements, but if you want to customise the settings please see the next section 'Programming the Hitachi room unit'.* |

### 4.22.7.2. Programming

- **The built-in heating program**

The built-in heating program has 6 temperature level changes per day that can be set between 3.00am and 2.50am the following day - allowing you to maintain the evening temperature after midnight. Each temperature level can be set between 5°C and 35°C, and adjusted in 0.5°C increments. The factory default program for heating is as follows.

| **Monday to Friday** | **Period** | **1** | **2** | **3** | **4** | **5** | **6** |
|---|---|---|---|---|---|---|---|
| (Day 1 to 5) | Time | 6:30 | 8:00 | 12:00 | 14:00 | 18:00 | 22:30 |
| | Temperature | 21ºC | 18ºC | 21ºC | 18ºC | 21ºC | 16ºC |

| **Saturday to Sunday** | **Period** | **1** | **2** | **3** | **4** | **5** | **6** |
|---|---|---|---|---|---|---|---|
| (Day 6 to 7) | Time | 8:00 | 10:00 | 12:00 | 14:00 | 18:00 | 23:00 |
| | Temperature | 21ºC | 21ºC | 21ºC | 21ºC | 21ºC | 16ºC |

- **Reviewing the heating program**

To review or edit the heating program use the PROGRAM or buttons to navigate between the 6 individual programming periods for that day. Use the button to step through each day of the week, so the complete 7 day heating program can be reviewed or edited.



Все каталоги и инструкции здесь: https://splitsystema48.ru/instrukcii-po-ekspluatacii-kondicionerov.html

- **Modifying the heating program**

To change the heating program:

**a.** Press either of the PROGRAM ( or ) buttons to enter the programming mode. The time / temperature settings for period 1 on Monday (Day 1) will be flashing as shown. The active period is highlighted by a flashing square around the numbers at the bottom of the screen and the selected day is shown with the day indicator.

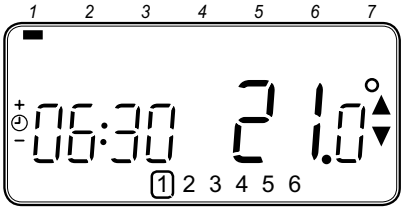


**b.** To adjust the period start time use the ⏲ ⊕ or ⊖ buttons, the 'OK?' indicator will be displayed to confirm the change. Holding the button down will change the time quickly.

| | NOTE |
|---|---|
| - | *If you are pressing the ⏲ ⊕ or ⊖ buttons and the display flashes the next period, it means the next period will be pushed forward.* |

**c.** Once the required time is reached press the green OK button to confirm.

| | NOTE |
|---|---|
| - | *If the original time setting did not require adjustment press the green OK button to move to step 'd'.* |

**d.** The temperature setting for period 1 on Monday (Day 1) will now be flashing. To adjust this press the ▲ or ▼ buttons and confirm the setting again by pressing the green OK button.

**e.** The next time and temperature period will now be active. Adjust this by repeating steps b - d above until all 6 periods are set for Monday or press the A button to run the program as set, at any time.

You now have a choice of how to set the program for the next day:

**f.** i) Press the button 1 to copy Monday's program into Tuesday. The display will go blank apart from the 'non flashing' day indicator, which indicates the day copied and the 'flashing' target day to copy the program to. To accept this day press the green OK button. To select a different target day press the 1 button until the 'flashing' day indicator is under the required day, then accept it by pressing the green OK button.

| | NOTE |
|---|---|
| - | *Once the target day is confirmed it becomes the day that is copied if the 1 button is pressed again.* |

OR ii) Press the 1 button to move the day indicator to Tuesday (Day 2). The program for that day can then be adjusted by following steps b to e. Programs for the remaining days can be set in the same way, using the 1 button to move to the next day. To exit the programming mode select the desired operating mode by pressing the A, ✋ or ⏻ buttons.



Все каталоги и инструкции здесь: https://splitsystema48.ru/instrukcii-po-ekspluatacii-kondicionerov.html

| | NOTE |
|---|---|
| - *To run the adjusted program select the AUTO mode.* | |

**Disabling / Enabling time periods**

The Hitachi room unit has 6 periods each day that can be programmed, but you may not need all of these switch points for your heating requirements. Therefore, any period from 2 to 4 can be removed from (or returned to) the heating program profile.

To disable or enable time periods:

**a.** To disable unwanted periods go to the desired period ( 2 to 6 ) using the PROGRAM ❮ or ❯ buttons to navigate, ensure the correct period is highlighted with the flashing square symbol. Press and hold the ⓘ button for at least 2 seconds and the display will indicate the period has been removed from the program.

**b.** To enable periods again follow the same procedure as above, navigating to the already disabled period. To enable this period again press and hold the ⓘ button for at least 2 seconds.

### 4.22.7.3. Operating

- **Choosing the operating mode**

The Hitachi room unit can operate in three different modes: Automatic, Manual or Off. To set the operating mode press either of the Ⓐ, ✋ or ⏻ buttons. The screen indicates which mode is currently active by displaying AUTO, MAN or OFF.

• AUTOMATIC (Ⓐ) mode sets the Hitachi room unit to follow the built-in temperature program (default or personalised). Operating the Hitachi room unit in this mode is the best way to maintain a high level of temperature comfort whilst maximising your energy savings.

• MANUAL (✋) mode sets the Hitachi room unit to act as a simple thermostat with a fixed setpoint throughout the day. The setpoint can be adjusted from 5°C to 35°C by using the 🌡 ▲ or ▼ buttons. The Hitachi room unit will continue to maintain this temperature until another operating mode or temperature is selected.

• OFF (⏻) mode sets the Hitachi room unit to control to a minimum temperature setting of 5°C (default) that acts as a frost protection measure for your home.

- **During normal operation**

• Temperature Override

During normal operation (AUTO (Ⓐ) or mode) the programmed temperature can be adjusted manually by pressing the 🌡 ▲ or ▼ buttons or the ⓘ button. The ‘target’ temperature will be displayed and flash for 5 seconds - during this time the 🌡 ▲ or ▼ buttons can be used to modify the set value. Note: This temperature override is cancelled at the next programmed temperature change.

• Temperature Enquiry

When the Hitachi room unit is configured to control the room temperature directly it will display the current room temperature. To review the programmed ‘target’ temperature (the temperature which the Hitachi room unit is trying to maintain) press the ⓘ button. This ‘target’ temperature value will be displayed flashing for 5 seconds before returning to the current room temperature value.



Все каталоги и инструкции здесь: https://splitsystema48.ru/instrukcii-po-ekspluatacii-kondicionerov.html

- **Using the special functions**

HOLIDAY Function

The holiday function allows you to set a constant temperature (default = 10°C) for a specified number of days (from 1 - 99 days). This lets you save energy and related costs when you are away from home, but resumes normal operation on the day of your return.

To set the Holiday function:

**a.** Ensure the Hitachi room unit is running in AUTO (A) or MAN (✋) operating modes.

**b.** Press the holiday button to display the holiday days counter and temperature setting, along with the holiday indicator.

**c.** Press the + or − time buttons to set the holiday time (1 to 99 days) and press the green OK button to confirm.

**d.** Press the ▲ or ▼ buttons to set the holiday temperature (5°C to 35°C) and press the green OK button to confirm.

The Hitachi room unit will now control to the new temperature for the set number of days that your home is vacant. At midnight the holiday counter will be reduced by one until the selected number of days have passed. The Hitachi room unit will then return to normal operation as set by the AUTO (A) or MAN (✋) mode. To cancel the HOLIDAY function or to exit the function at any time press the button a second time.

- **Adjusting the time**

To adjust only the time during normal operation use the + or − buttons to adjust the time and press the green OK button again to confirm any changes.

4

## 4.23. DEVICE CONTROL SYSTEM

| Control subject | Purpose | |
|---|---|---|
| | Heating operation | Defrost operation |
| Control frequency of inverter compressor | The frequency control is determined by PI control, through the next parameters: Δ outlet temperature and water target temperature. | Fixed frequency |
| Opening degree expansion valve for main circuit | - Control range of expansion valve opening degree is determined to optimize TsSH. | Fully open |
| Opening degree expansion valve for liquid injection | - Specified opening degree controlled by temp. on the top of compressor (Td.). | - |
| Fan | - Fan Step is controlled according to PS (Suction pressure) | Fan stop. |
| 4-Way valve (RVR) | ON | OFF |
| Solenoid valve (SVG) (Hot gas bypass) | - Turn ON at starting before 4-way valve ON. | Turn ON for 1 minute at defrosting |
| Solenoid valve (SVI) (Liquid injection) | - Turn ON if Td≥90ºC continue 3 seconds | OFF |

Temp.:Temperature
Td: discharge temperature
TsSH: Suction gas super heat
Ps: suction pressure



Все каталоги и инструкции здесь: https://splitsystema48.ru/instrukcii-po-ekspluatacii-kondicionerov.html

# 4.24. YUTAKI UNIT PCB

- **PCB drawing**

The PCB in the Yutaki unit operates with nine DIP switches, six LEDs and two rotary switches. The location is as follows:

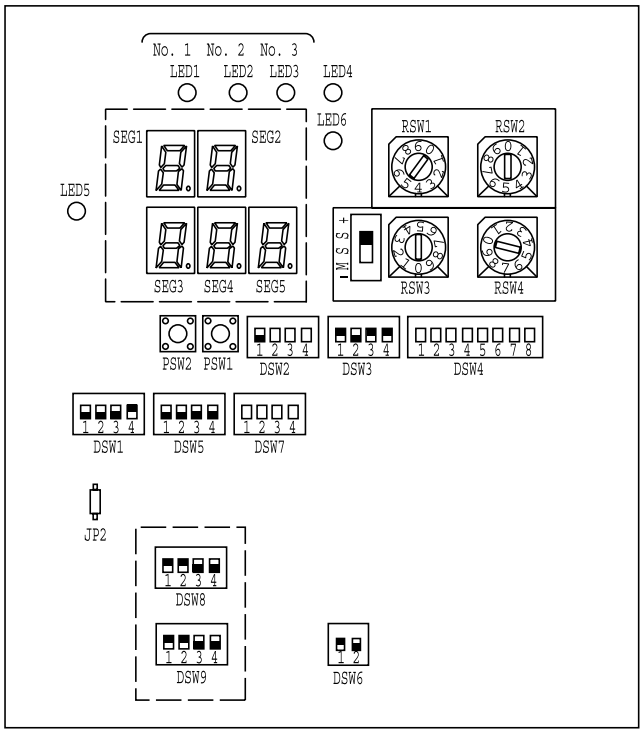


| LED indication | Function |
|---|---|
| LED 1 | Power supply indication |
| LED 2 | |
| LED 3 | |
| LED 4 | Operation status indication |
| LED 5 | Alarm indication |
| LED 6 | Setting mode indication |

**1. Status indication.**
Press the PSW2 more than three seconds to change the status display mode.

**2. Alarm history**
Press the PSW1 and PSW2 together more than three seconds to switch to alarm history mode.

| Switch indication | |
|---|---|
| DSW1 | Optional functions |
| DSW2 | Unit control configuration / Unit HP |
| DSW3 | Unit control configuration |
| DSW4 | Unit model configuration |
| DSW5 | Not used |
| DSW6 | End resistance / Fuse recovery |
| DSW7 | Unit control configuration |
| DSW8 | Setting Pd Pressure Sensor Type |
| DSW9 | Setting Ps Pressure Sensor Type |

| Rotatory switch | |
|---|---|
| RSW1 & RSW2 | Heating setting temperature |
| RSW3 & RSW4 | Not used |
| SSW | UP="+ Temp." / DOWN="-Temp." |

| Jumper setting | |
|---|---|
| JP2 | Cut ⇒ Re-Start after power failure |

**NOTE**

- *The mark "■" indicates position of dips switches. Figures show setting before shipment or after selection.*
- *Not mark "■" indicates pin position is not affecting.*

**NOTE**

- *Before setting dips switches, firstly turn off power source and set the position of the dips switches. If the switches are set without turning off the power source, the contents of the setting are invalid.*

| Segment | Indication |
|---|---|
| SEG1 / SEG2 | Unit Status |
| SEG3, SEG4, SEG5 | Discharge and Suction pressure value alternatively |



Все каталоги и инструкции здесь: https://splitsystema48.ru/instrukcii-po-ekspluatacii-kondicionerov.html

# 4.25. SAFETY AND CONTROL DEVICE SETTING

| MODEL | | RHUE3AVHN | RHUE4AVHN | RHUE5A(V)HN | RHUE6A(V)HN |
|---|---|---|---|---|---|
| **For compressor** | | | | | |
| Pressure switches | | Automatic Reset, Non-Adjustable (one per unit) | | | |
| HIGH Cut-Out | MPa | $4.15^{-0.05}_{-0.15}$ | $4.15^{-0.05}_{-0.15}$ | $4.15^{-0.05}_{-0.15}$ | $4.15^{-0.05}_{-0.15}$ |
| Cut-In | MPa | 3.20±0.15 | 3.20±0.15 | 3.20±0.15 | 3.20±0.15 |
| Fuse | | | | | |
| 1~ 230V 50Hz | A | 40 | 40 | 50 | 50 |
| 3N~ 400V 50Hz | A | - | - | 2x20 | 2x20 |
| Oil Heater Capacity | W | 40 | 40 | 40 | 40 |
| **For condenser fan motor** | | | | | |
| Internal thermostat | | Automatic Reset, Non-Adjustable (one per each fan) | | | |
| Cut-Out | ºC | - | - | - | - |
| **For control circuit** | | | | | |
| Fuse (on PCBw1) | A | 5 | 5 | 5 | 5 |
| Fuse (on PCBw3) | A | 5 | 5 | 5 | 5 |
| Fuse (on PCBw4) | A | 5 | 5 | 5 | 5 |
| **For water pump circuit** | | | | | |
| Fuse | A | 3.15 | 3.15 | 3.15 | 3.15 |

- **Compressor protection**

The following devices and their combinations protect the compressor

| Device | Protection |
|---|---|
| **High- Pressure switch** | This switch cuts out the operation of the compressor when the discharge pressure exceeds the setting. |
| **Oil heater** | This band heater protects against the oil carry-over during the cold starting, as the band heater is energized while the compressor is stopped. |
| **Fan motor protection** | Internal thermostat that is embedded in the fan motor winding: this internal thermostat cuts out the operation of the fan motor when the temperature of the fan motorr widing exceeds the settings. |





Все каталоги и инструкции здесь: https://splitsystema48.ru/instrukcii-po-ekspluatacii-kondicionerov.html

The figure below shows the outline of the control system

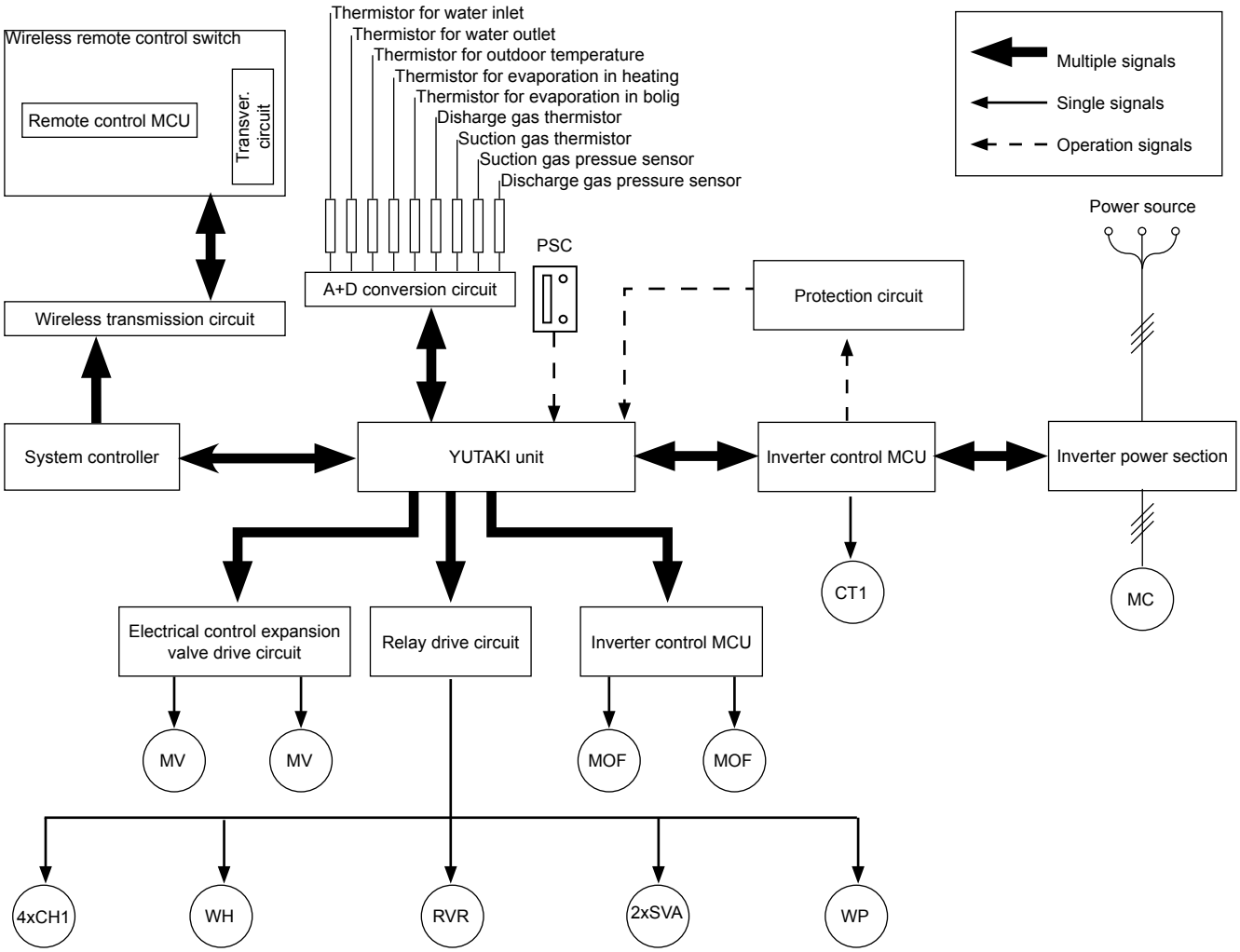


| | |
|---|---|
| MC | Motor (Camp) |
| MOF | Motor for outdoor fan |
| MV | Elec.Exap. Valve |
| CH | Crankase heater |
| WH | Water heater |

| | |
|---|---|
| CT1 | Current transformer |
| RVR | 4-Way valve |
| SVA | Solenoid valve |
| PSC | Pressure switch for control |
| WP | Water pump |



Все каталоги и инструкции здесь: https://splitsystema48.ru/instrukcii-po-ekspluatacii-kondicionerov.html

## 4.25.1. Defrost operation control

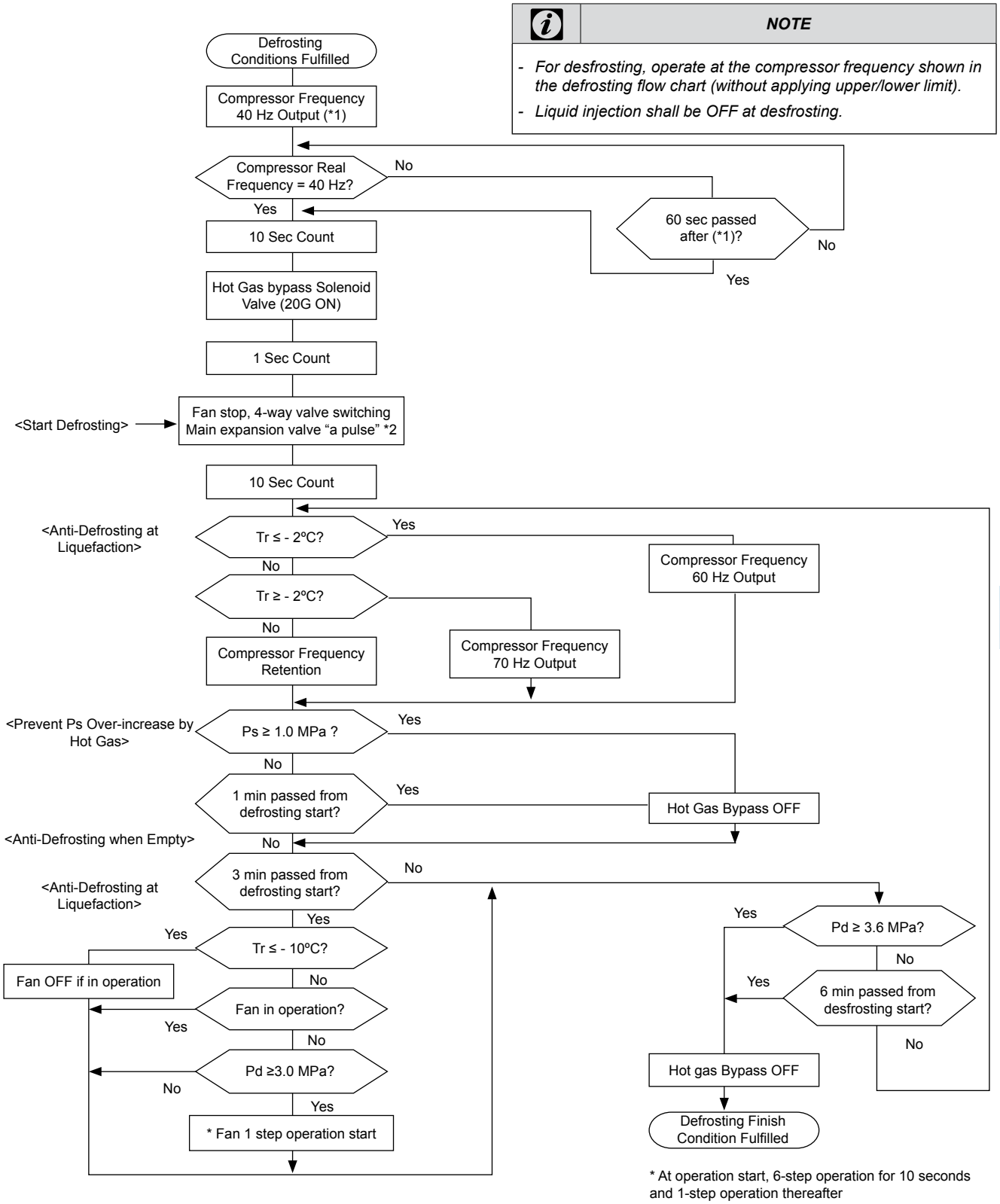


4



Все каталоги и инструкции здесь: https://splitsystema48.ru/instrukcii-po-ekspluatacii-kondicionerov.html

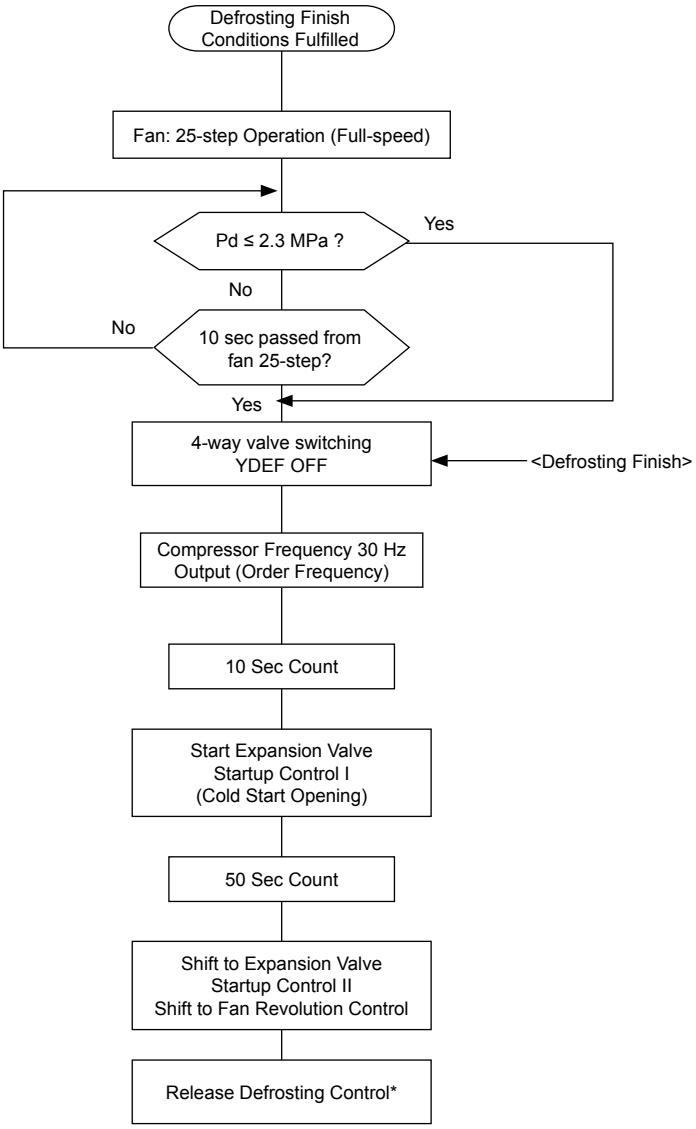




Все каталоги и инструкции здесь: https://splitsystema48.ru/instrukcii-po-ekspluatacii-kondicionerov.html

## 4.25.2. Control of expansion valve

Abasic flow for the expansion valve drive assuming long compressor operation time.

See sections from the next page for details in each procedure (Details of Performance, Shifting Conditions).

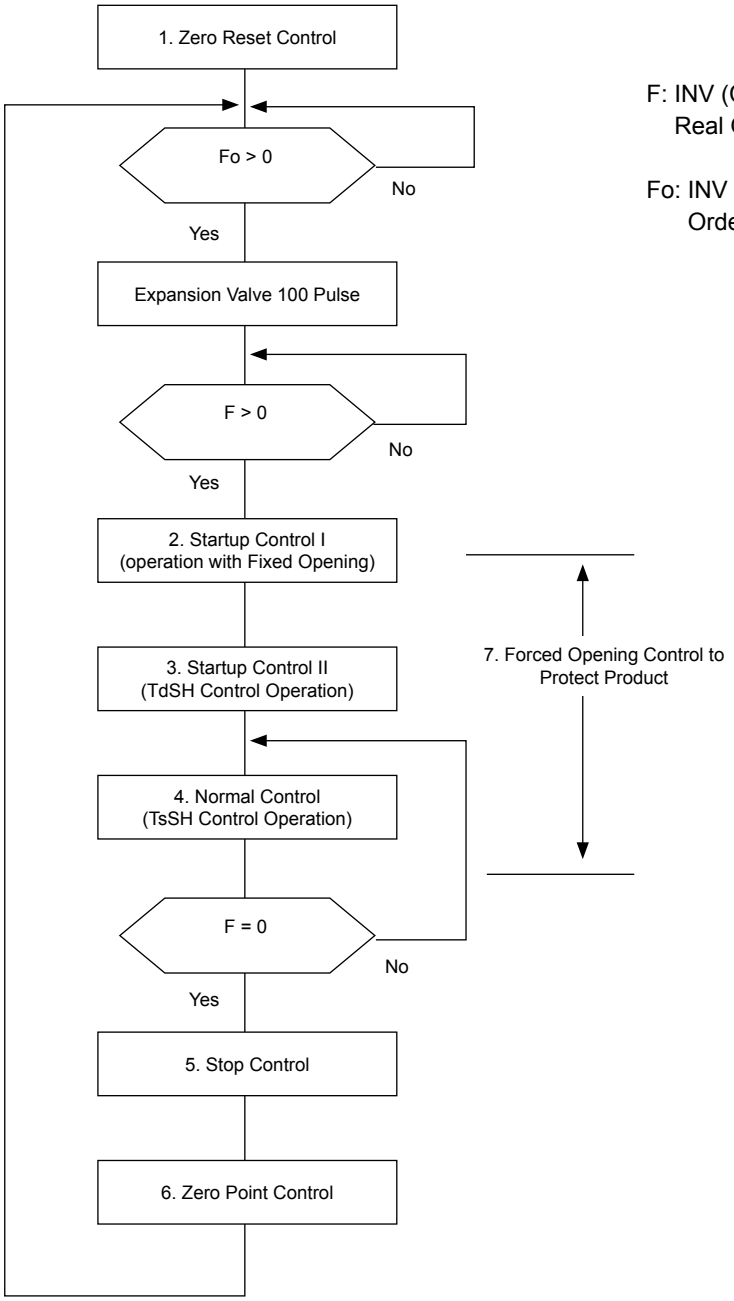


F: INV (Compressor)
Real Operation Frequency (Hz)

Fo: INV (Compressor)
Order Frequency (Hz)

4



Все каталоги и инструкции здесь: https://splitsystema48.ru/instrukcii-po-ekspluatacii-kondicionerov.html

- **Zero Reset Control**

The purpose of this control is to correct the discrepancy of opening, if any, before a trouble occurs in the refrigerant cycle.

If first fully closes the expansion valve opening and then recovers to the predetermined opening.

- **Startup Control I (operation with fixed initial opening)**

Selects the initial opening by determining between hot start or cold start from the state of discharge gas temperature (Td) and outdoor air temperature (Ta) upon compressor startup.

- **Startup Control II (TdSH control operation)**

This is a drive control to prioritize the closing operation in order to ensure the discharge super heat (TdSH) calculated From discharge pressure (Pd) and discharge gas temperature (Td) after compressor startup.

- **Normal control (TsSH control)**

Controls the expansion valve opening to achieeve the target TsSH (SH set) by performig PI calculation based on the inlet gas super heat (TsSH) calculated by suction pressure (Ps) and inlet gas temperature (Ts).

- **Stop control**

After compressor stop (real operation frequency = 0 Hz), retain for one three seconds the expansion valve opening immediately before the stop, and then make the expansion valve opening “o” pulse.

- **Zero point control**

This is a control to fully close the expansion valve opening during normal operation.



Все каталоги и инструкции здесь: https://splitsystema48.ru/instrukcii-po-ekspluatacii-kondicionerov.html

# 5. AVAILABLE OPTIONAL FUNCTIONS

## CONTENTS

5.1. Freeze protection ..... 152

5.2. Restart after power failure ..... 152

5.3. Compressor ON/OFF control ..... 153

5.4. 3 Minutes guard control ..... 154

5.5. Power save mode ..... 154





Все каталоги и инструкции здесь: https://splitsystema48.ru/instrukcii-po-ekspluatacii-kondicionerov.html

## 5.1. FREEZE PROTECTION

Using setting point PA=1. The unit is controlling the pump in order to avoid water circuit freeze as the following graphic indicates:

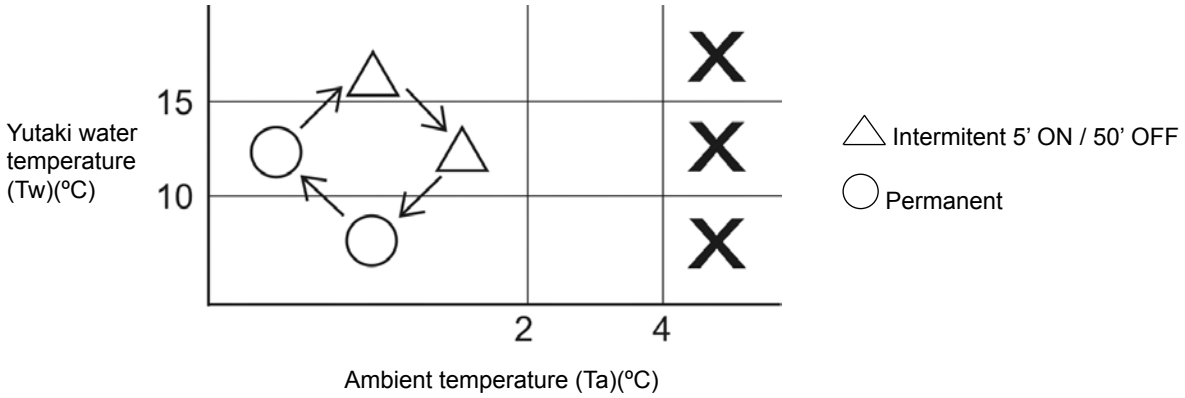


When in operation in winter in the outdoor air temperature at 2 ºC or lower, the water pump operates to protect Yutaki unit from freezing. When the outlet water temperature is 15 ºC higher, the pump performs without interruptions, i.e., runs for five minutes and stops for 55 minutes. The segment displays shows “PU” when the pump is running for five minutes, and “88” when at stop for 55 minutes. This control is released when the outdoor temperature becomes 4 ºC or higher.

Winter antifreezing control (pump intermittent operation) becomes inactive when OFF is selected in the setting mode. When run operation is performed during this control, release the control and run the pump.

The winter antifreezing control is not performed in any abnormality such as when wiring of outlet water thermistor or outdoor air thermistor is broken or short-circuitted (Alarm display “12” or “22”). The pump turns off after 10 seconds following the fulfillment of winter antifreezing control release conditions.

## 5.2. RESTART AFTER POWER FAILURE

Jumper JP2 forces the unit to maintain the status before the failure.

If the unit was running, once the power is recovered the unit will run again. On the other hand, if the unit was stopped, it will remain stopped.

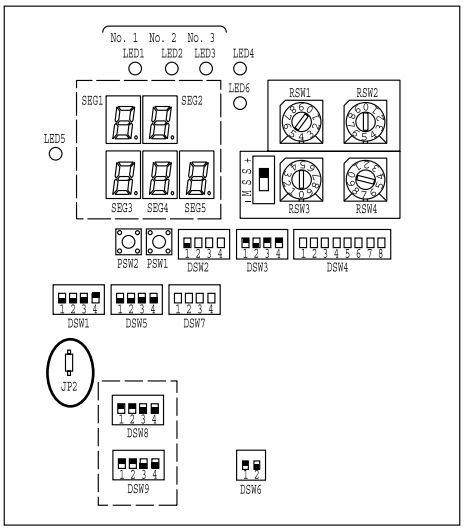




Все каталоги и инструкции здесь: https://splitsystema48.ru/instrukcii-po-ekspluatacii-kondicionerov.html

- **Jumper lead setting (JP2): Automatic restart after power failure**

Keep the same status as before. Setting before shipment:

| JP2 |
|---|
| 1 |

**0 = Open; 1 = Short circuit**

The function selection using the jumper lead setting is shown in the table below.

| Setting | Function | Details |
|---|---|---|
| 0 | Enable | If this function is 'Enable', in case of power failure the unit will restart automatically once the power is recovered |
| 1 | Disable | |

## 5.3. COMPRESSOR ON/OFF CONTROL

ON/OFF Temperature Differential (Thermo-ON/OFF Difference) is configurable by 1 ºC, i.e., “1, 2, 3, 4” by setting mode operation. The factory setting (default) is “4 ºC”.

This mode is activated by turning pin 3 of DSW1 ON.

Pressing PSW2 and PSW1 for more than three seconds at the same time allows changing from each item displayed. To finish changing, press PSW2 and PSW1 for more than three seconds again after changing to predetermined setting.

The chart of setting operation is shown below.

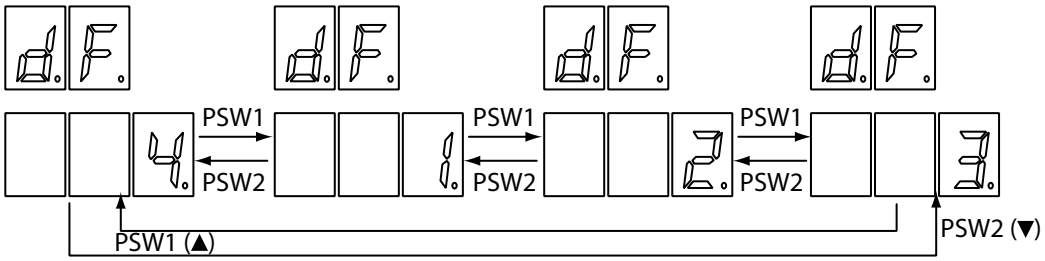


PSW1: Valve up
PSW2: Valve down

5



Все каталоги и инструкции здесь: https://splitsystema48.ru/instrukcii-po-ekspluatacii-kondicionerov.html

## 5.4. 3 MINUTES GUARD CONTROL

Compressor startup by thermo recovery shall always to ensure 3 minutes of compressor OFF status. However, the standard upon operation startup is 3 minutes but it can be, changed by the setting mode in the following chart. The time available for setting is 30 seconds, and by 1 minute between 1 and 10 minutes.

This mode is activated by turning pin 3 of DSW1 to ON.

Pressing PSW2 and PSW1 for more than three seconds at the same time allows changing from each item displayed. To finish changing to predetermined setting.

The chart of setting operation is shown below.

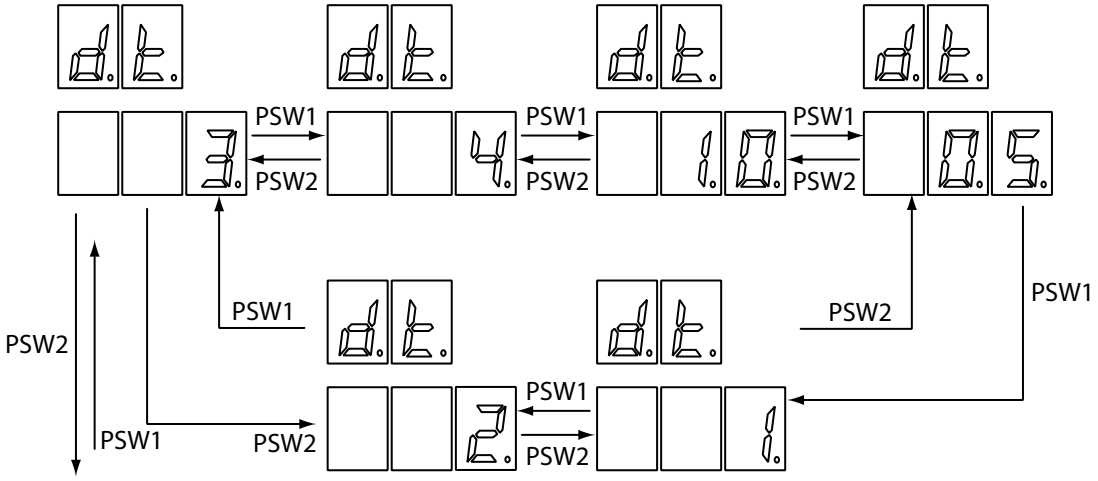


PSW1: Valve up
PSW2: Valve down

## 5.5. POWER SAVE MODE

When power save mode is selected with “DSW4-6” ON, the frequency upper limit for each HP changes from “Standard” --> “Power Saver” (i.e., frequency upper limit lowers by 10%).

This mode only changes the frequency upper limit of the compressor, and does not affect to other configurations.
DSW ON/OFF determination is performed only immediately after the Power activation.



Все каталоги и инструкции здесь: https://splitsystema48.ru/instrukcii-po-ekspluatacii-kondicionerov.html

# 6. TEST RUN

## CONTENTS

6.1. Checking procedure before the test run ..... 156

6.2. Test run procedure for Yutaki ..... 158

6.2.1. System controller testing ..... 160





Все каталоги и инструкции здесь: https://splitsystema48.ru/instrukcii-po-ekspluatacii-kondicionerov.html

# 6.1. CHECKING PROCEDURE BEFORE THE TEST RUN

When you have finished the installation, perform the test run according to the following procedure. After performing the test run, hand over the system to the customer.

- Perform the test run of the Yutaki one by one.
- Make sure that the electrical wiring and the refrigerant piping are correctly connected.
- You should perform the test run according to the “Test Run Procedure for Yutaki” on the next pages.

***DANGER***

- *Electrical hazard. Risk of death. Do not push the button of the magnetic switch(es). If you do so, you will cause a serious accident.*

***WARNING***

- *Several dangers. Can cause injuries or malfunction. Do not operate the system until all the check points have been cleared.*
  - *Measure the resistance between the ground and the terminal of the electrical components. Make sure that the electrical resistance is more than 1 MΩ. Otherwise, do not operate the system until you find the electrical leakage and you repair it. Do not impress the voltage on the terminals for transmission 1 and 2.*
  - *Make sure that the terminals for the power supply wiring (“L1” to “L1”, “L2” to “L2” , “L3” to “L3” and “N” to “N” of each terminal board for AC230V or AC400V match correctly. Otherwise, you may damage some components.*
  - *Make sure that the stop valves of the Yutaki are fully open. Then, start the system.*
  - *Make sure that the switch on the main power source has been ON for more than twelve hours in order to warm the compressor oil by the oil heater. The operation is not available within 4 hours after turning ON the power supply.*
- *Pay attention to the following items while the system is running:*
  - *Do not touch any of the parts at the discharge gas side with your hands because the compressor chamber and the pipes at the discharge gas side are hot at a temperature that is higher than 90°C.*
  - *Do not touch any electrical components for more than three minutes after turning OFF the main switch. Make sure that the stop valve of the gas line and the stop valve of the liquid line are fully open.*

- **Checking procedure**

1. Make sure that the stop valve of the gas line and the stop valve of the liquid line are fully open.
2. Make sure that there is no refrigerant leakage. (The flare nuts sometimes loosen because of the vibration during the transportation).
3. Make sure that the switch on the main power source has been ON for more than twelve hours in order to warm the compressor oil by means of the oil heater.
4. Check whether or not the electrical wiring of the Yutaki is connected as shown in chapter "3" Electrical Wiring.
5. Make sure that each wire terminal is correctly connected at the power source.

***NOTE***

- *Make sure that the field-supplied electrical components (main switch fuse, fuse-free breaker, earth leakage breaker, wires and terminals) have been properly selected according to the electrical data in the technical catalog of the unit. Also, make sure that the field-supplied electrical components comply with both national and local codes.*
- *Use the shielded cables for the field wiring in order to avoid electrical noise. (The length of the shielded cable should be less than 1000m. The size of shielded cable should comply with local codes.)*



Все каталоги и инструкции здесь: https://splitsystema48.ru/instrukcii-po-ekspluatacii-kondicionerov.html

- **Check before start up**

  - Check that the hydraulic connections are tight.
  - Check that water pressure is 1 bar minimum.
  - Check that the water flow is constant and that the purge of the circuit is correct.
  - Check that the protections and electrical connections are in line with the electrical patterns and this leaflet.
  - Turning on the heat pump YUTAKI
  - Turning on the electric heater EH 6 1. (If necessary)
  - The power relays for heater are controlled by the Yutaki controller.
  - Set the temperature for water (on YUTAKI) to a value of 55ºC to ensure the engagement of the resistance, whatever the temperature outside.





Все каталоги и инструкции здесь: https://splitsystema48.ru/instrukcii-po-ekspluatacii-kondicionerov.html

# 6.2. TEST RUN PROCEDURE FOR YUTAKI

1. Overview

Turning DSW1-2 ON sets the operation mode to be used during a test run.

DIP switch can be set while the power source is ON.

2. Details

1. Behavior during Mode Setting
   Shifts to this mode when DSW1-2 is turned ON during unit stop.
   LED6 turns ON to show that this mode is selected. Note that when DSW1-2 is turned ON when in operation, "40" is displayed as an incorrect operation and alarm-stop the unit. Recovery from this stop is automatic when DSW1-2 is turned OFF. Note also that Test Run Mode cannot be performde at the remote controller mode.

2. Setting

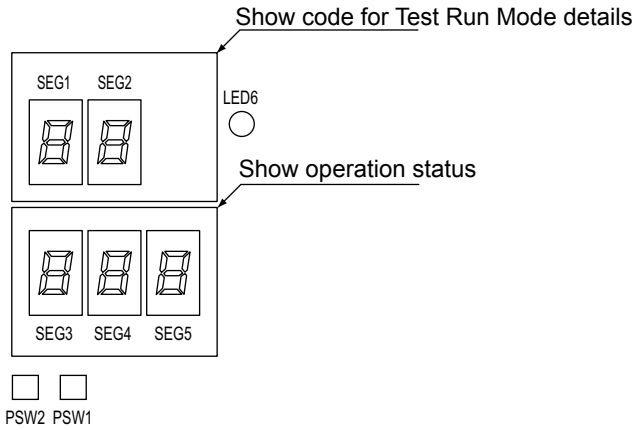


- After shifting this mode, codes of the names of selectable items appear in SEG1.2. The number of items depends on the product used. Items on the display change each time PSW 2 or 1 is pressed.

- Pressing PSW 1 and 2 together for three seconds or longer activates operation of the displayed item. The SET display of the item changes from ON --> Flash.

3. Behaviors in operation

The status display and details of behaviors in each operation mode are described in this section.

LED4 turns ON during operation.

| | WARNING |
|---|---|
| | - *Electrical hazard. Can cause serious injuries.*<br>  - *Do not touch any other electrical components while you are setting the switches on the PCB.*<br>  - *Do not attach or detach the service access panel when the power source for the unit is ON and the unit is operating.* |

| | NOTE |
|---|---|
| | - *Set all the DIP switches of DSW1 to OFF after completing the test run.* |



Все каталоги и инструкции здесь: https://splitsystema48.ru/instrukcii-po-ekspluatacii-kondicionerov.html

- **Parameters check using 7-Segment**

Press PSW2 more than 3 seconds. Now you can consult the Yutaki parameters by pressing PSW2 (up) or PSW1 (down).

| Code (Upper side) | Content | Code (Upper side) | Content |
|---|---|---|---|
| . . | Operation status | tP | Liquid refrigerant temperature |
| Pd | Pd | tH | Evaporating temperature |
| PS | Ps | tS | Ts |
| tc | Chilled water setting temperature | Eo | Exp. V pulse |
| tc. | Chilled water setting temperature 2 | CF | Compressor Hz |
| th | Hot water setting temperature | FS | Fan stop |
| th. | Hot water setting temperature 2 | 0 | Manual defrost ON (if PSW1 & PSW2 pushed together for 3 sec.) |
| in | Water inlet | no. | ROM No. |
| ot | Water outet | Cd | Model identification |
| tA | Ambient temperature | oP | Optional Function selection status |
| td | Td | - | - |

- **Pump single operation**

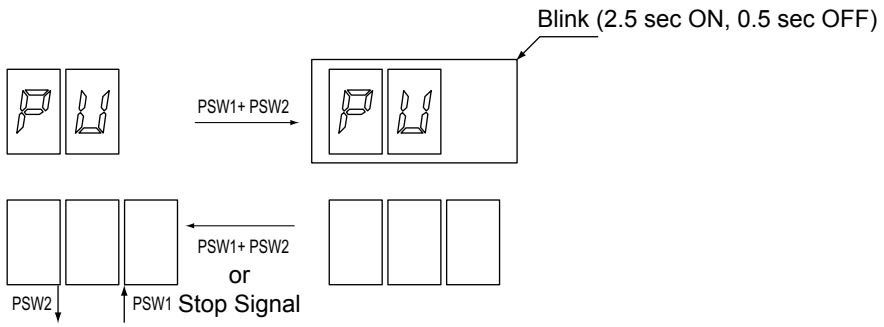


(Behavior)

"PSW1+2" turns ON only pump.

| | NOTE |
|---|---|
| - | *Pump feed-back abnormality does not turn OFF the pump.* |

6



Все каталоги и инструкции здесь: https://splitsystema48.ru/instrukcii-po-ekspluatacii-kondicionerov.html

- **High Pressure Cut Confirmation**

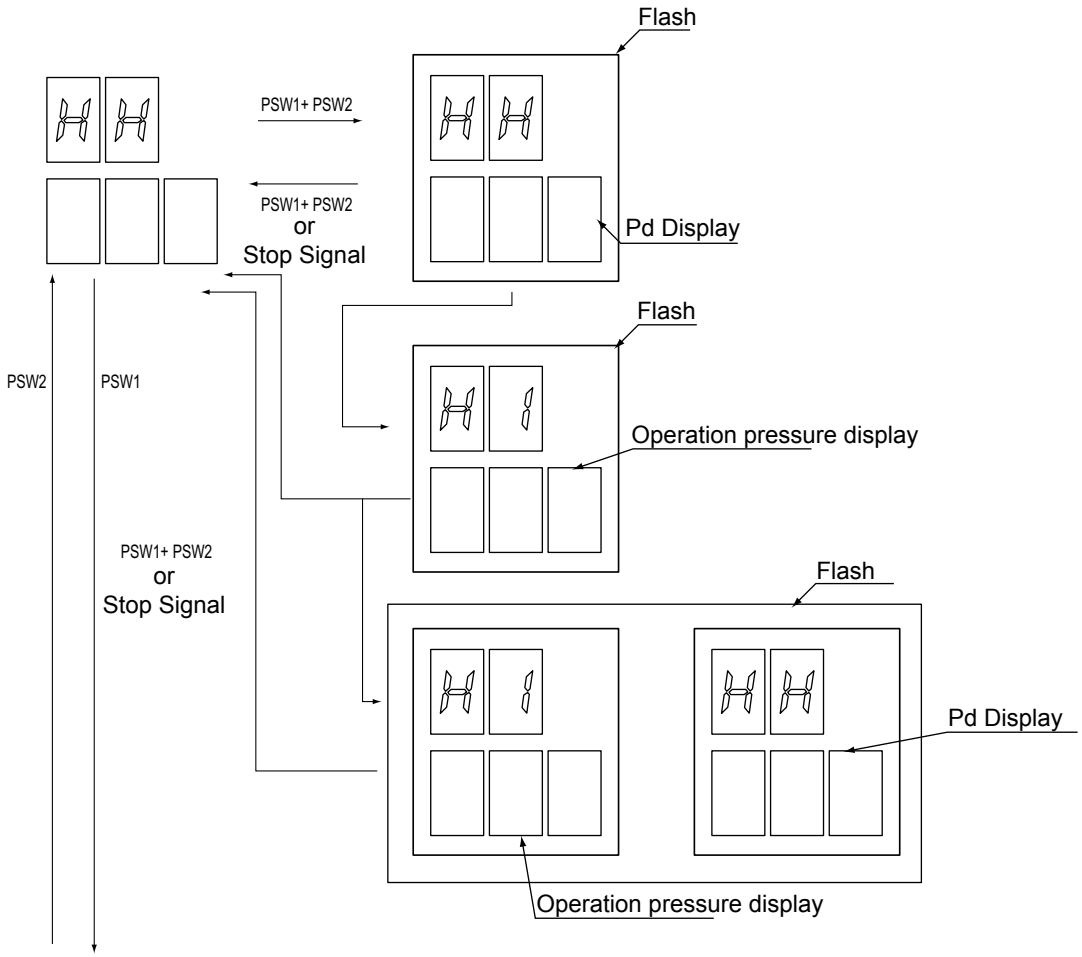


(Behavior)

1. Ignore the pump interlock signal and operate the compressor

2. For inverter model, Pd Retry and inverter protection by Pd are disabled.

## 6.2.1. System controller testing

### 6.2.1.1. System start-up

After the installation of sensors and outputs, the System Controller can be started for the first time.

Switch on the mains power supply.

The controller will be initialised with the default configuration stored in the internal memory.

A test procedure is performed to check the validity of the data in the internal memory, and the various inputs are tested. All sensors and communications devices are automatically detected. All faults and warnings are automatically reset and the software version is displayed for reference.

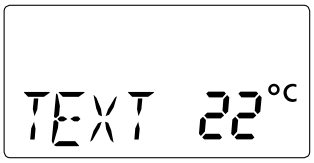




Все каталоги и инструкции здесь: https://splitsystema48.ru/instrukcii-po-ekspluatacii-kondicionerov.html

#### 6.2.1.2. System test

Once the system has been installed, it is recommended that the following tests are carried out:

1. Check that you have selected the correct configuration, and that the necessary installation parameters have been set.

2. Check the wiring of the inputs and outputs. Use the procedure in 7.3 to view the temperature sensor values. It is possible to manually override the outputs to test the system operation.

3. Check that the Room Unit is communicating with the RF Receiver. To do this, change the temperature setpoint on the Room Unit to the maximum or minimum value and check that the heat pump reacts appropriately.

#### 6.2.1.3. Reviewing the operational data

The table below shows the values that are available to be viewed during Normal Operation mode. These can be shown by pressing the i button

| | Abbr. | Operational Data | Units | CONF |
|---|---|---|---|---|
| Sensor Temperatures | TEXT | Outdoor temperature | °C | 12345 |
| | TSUP | Supply water temperature | °C | 12345 |
| | TMIX | Zone1: Mixed supply temperature | °C | ---45 |
| | TRET | Return temperature | °C | 12345 |
| | TDHW | DHW temperature | °C | 123-5 |
| | TR1 | Room temperature | °C | 12345 |
| | V | Mixing valve position | - | ---45 |
| | FAUL | Fault status | - | 12345 |
| Controller Setpoints | SSUP | Overall system supply setpoint | °C | 12345 |
| | S1 | Zone1: supply setpoint | °C | 12345 |
| | SR1 | Zone1: room setpoint | °C | 12345 |
| | S2 | Zone2: supply setpoint | °C | 12345 |
| | DSET | DHW setpoint | °C | 123-5 |
| | SDHW | DHW supply setpoint | °C | 123-5 |

Normal Operation mode

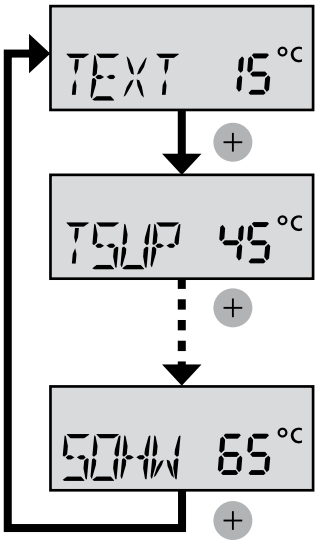


6



Все каталоги и инструкции здесь: https://splitsystema48.ru/instrukcii-po-ekspluatacii-kondicionerov.html

| NOTE |
|---|
| - *Operational data shown depends on the system configuration (CONF) setting.*<br>- *Zone 1 is the heating loop controlled by the System Controller.*<br>- *Zone 2 is the heating loop controlled by the Extension Controller.* |

### 6.2.1.4. Manually overriding the outputs

This feature allows the status of the outputs to be changed in order to test the electrical connections.

To enter Output Display mode from Normal Operating mode, press the SEL and SET buttons together for at least one second. The display will show “HPS” to indicate that the controller is in Output Display mode and shows the first output “HPS” and its current status.

1. Use the + and − buttons to move up or down the output list according to the table.

2. To change an output, use the SET button to enter Output Setting mode. The value of the output will flash to show that it can now be changed. To change the output value, use the + and − buttons.

3. To save the output setting, press the SET button. The flashing will stop to show the value has been saved, and the letter F (Fixed) will appear to show that the output is being overridden. Note that the value must be saved before it takes effect. Instead, to cancel the change, and retain the previously stored value, press the SEL button.

To cancel the manual override of an output, enter the Output Setting mode and then press + and − together for one second. The “F” disappears from the display to show that the output is no longer overridden.

At any time, pressing the i button will return the display to normal operation mode.

Please refer to the electrical wiring connections to identify which relays should be connected to which output for a particular system configuration.

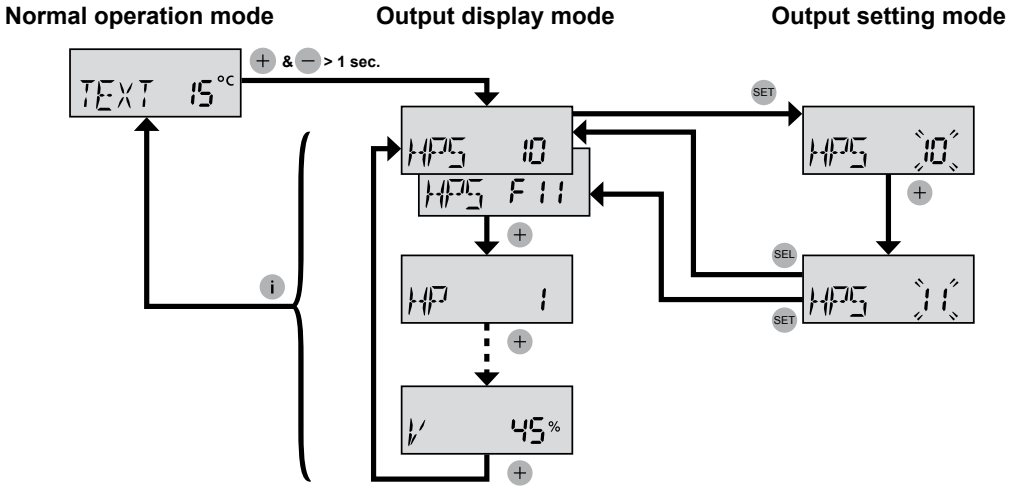


| ID | Output | Min | Max | CONF |
|---|---|---|---|---|
| HPS | Heat pump setting (mA) | 2 | 20 | 12345 |
| HP | Heat pump remote on/off | 0 | 1 | 12345 |
| PO2 | Secondary pump (not displayed if P2=0) | 0 | 1 | 12345 |
| DHWV | DHW valve/pump (not shown if P1=0) | 0 | 1 | 123-5 |
| EHS1 | Electric heater output 1 | 0 | 1 | -2--- |
| EHS2 | Electric heater output 2 | 0 | 1 | -2--- |



Все каталоги и инструкции здесь: https://splitsystema48.ru/instrukcii-po-ekspluatacii-kondicionerov.html

| ID | Output | Min | Max | CONF |
|---|---|---|---|---|
| DHWE | DHW electric heater enable (not shown if P1=0) | 0 | 1 | 12--- |
| PO1 | Boiler pump | 0 | 1 | --34 |
| BLR | Boiler on/off | 0 | 1 | --345 |
| V | Mixing valve position (%) | 0 | 99 | ---45 |

| | NOTE |
|---|---|
| - | *Operational data shown depends on the system configuration (CONF) setting.* |





Все каталоги и инструкции здесь: https://splitsystema48.ru/instrukcii-po-ekspluatacii-kondicionerov.html

**Все каталоги и инструкции здесь:** https://splitsystema48.ru/instrukcii-po-ekspluatacii-kondicionerov.html

# 7. TROUBLESHOOTING

## CONTENTS

7.1. Initial troubleshooting ..... 166

7.1.1. Unit and System controller - Power Supply failure ..... 166
7.1.2. Abnormal operation of the devices ..... 168
7.1.3. Incidents of operation ..... 174

7.2. Troubleshooting procedure ..... 175

7.2.1. Alarm code ..... 177

7.3. Failure diagnosis method ..... 216

7.4. Checking procedure for main parts ..... 218

7.4.1. RHUE-(3~6)AVHN. Procedure for checking the DIP-IPM. ..... 218
7.4.2. RHUE-(5/6)AHN. Procedure for checking the ISPM. ..... 220
7.4.3. Checking capacitors CB1 & CB2. ..... 222
7.4.4. Fault diagnosis of DC fan motor. ..... 223

7.5. Troubleshooting of control system ..... 225

7.5.1. System controller ..... 225
7.5.2. System MMI Pack ..... 226

7.6. Troubleshooting of accessories ..... 227

7.6.1. Pump kit ..... 227
7.6.2. WEH - Water Electric Heater ..... 228
7.6.3. DHWT - Domestic Hot Water Tank ..... 228





Все каталоги и инструкции здесь: https://splitsystema48.ru/instrukcii-po-ekspluatacii-kondicionerov.html

# 7.1. INITIAL TROUBLESHOOTING

## 7.1.1. Unit and System controller - Power Supply failure

- **The LED and the 7-segment display are not indicated.**
- **Not operated.**

If the fuses are blown out or a circuit breaker is activated, investigate the cause of the overcurrent and take the necessary action.

| Observed failure | Cause | | Check item | Action (Turn OFF the main switch) |
|---|---|---|---|---|
| Power failure or power is not ON | | | Measure the voltage using a voltmeter | Supply the power |
| Blown out fuse or activation of the breaker at the power source | Accidental grounding for live cables | | Measure the insulation resistance | Remove the cause of the short circuit and replace the fuse |
| | Failure of compressor motor | | Measure the interphase resistance, insulation resistance | Replace compressor and fuse |
| | Failure of fan motor | | | Replace fan motor and fuse |
| Blown out fuse at the control circuit | Live cables short circuit | | Check for any un-insulated part of the wires | Remove the cause of the short circuit and replace the fuse |
| | Short circuit of the control circuit to earth | | Measure the insulation resistance | Remove the cause of the short circuit and replace the fuse |
| | Failure of the magnetothermic switch for the compressor | Insufficient contact | Check for magnetothermic switch to activate correctly | Replace magnetothermic switch and fuse |
| | | Coil failure | Measure coil resistance | |
| | Failure of the magnetothermic switch for the pump | Insufficient contact | Check for magnetothermic switch to activate correctly | Replace magnetothermic switch and fuse |
| | | Coil failure | Measure coil resistance | |
| | Failure of auxiliary relay | Insufficient contact | Check for magnetothermic switch to activate correctly | Replace auxiliary relay and fuse |
| | | Coil failure | Measure coil resistance | |
| | Failure of solenoid valve coil | Coil failure | Measure coil resistance | Replace coil and fuse |
| | Short circuit in PCB | | Check for the existance of any conductive contaminants | Remove the particles and replace fuse |
| | Oil heater failure | | Meassure resistance | Replace heater and fuse |
| | Failure of freeze protection heater for water piping | | Meassure resistance | Replace heater and fuse |
| Failure of the transformer | | | Check the transformer voltage output | Replace the transformer |



Все каталоги и инструкции здесь: https://splitsystema48.ru/instrukcii-po-ekspluatacii-kondicionerov.html

| Observed failure | Cause | Check item | Action (Turn OFF the main switch) |
|---|---|---|---|
| System controller cable disconnected | | Connect the cable | Replace the cable or repair the cable |
| One (or several) phase failure, or inverted phase order ("05" alarm). Only in three phase unit. | | Check the connection of R,S and T phase. | Reorder the phases |
| Failure of remote/local switch or remote/local switch set at “local” | | Check remote/local switch | Turn the switch to “remote” or replace switch |
| Deficient contact at terminal controller connectors | Insufficient connection or incorrect connection of the Yutaki unit PCB | Check the connectors and terminals | Remove rust, dust or any contaminants, check the correct tightening of the terminals |
| | Insufficient connection or incorrect connection of the terminal in remote controller | | |
| Failure of the system controller | | Refer to “Troubleshooting of system controller” | |
| Undefined PCB failure | Unconnected wires to PCB | Check the connectors | Correctly connect the wires |
| | Failure of PCB | Check PCB through its self-diagnostic mode | Replace PCB if it failed |
| Incorrect wiring connection | | Take action according to the procedure that is displayed in "TEST RUN" | |





Все каталоги и инструкции здесь: https://splitsystema48.ru/instrukcii-po-ekspluatacii-kondicionerov.html

## 7.1.2. Abnormal operation of the devices

| Observed failure | Cause | | Check item | Action (Turn OFF the main switch) |
|---|---|---|---|---|
| Cooling mode (1 minute power on) | Excessively high discharge pressure (high pressure switch activated) | Insufficient air flow to the heat exchanger | clogging of the air side heat exchanger? | Remove the clogging |
| | | | Obstacles at the inlet or the outlet of the airside heat exchanger | Remove the obstacles |
| | | | Is the service area for the unit sufficient? | Make sure the service area |
| | | | correct fan speed? | Replace the fan motor |
| | | Excesive inlet air temperature at the airside exchanger | Short circuited air to the unit? | Remove the cause of the shor-circuit air |
| | | | Any heating source near to the unit? | Remove the heat source |
| | | Excessively charged refrigerant | Expansion valve opening & sub cool | Correctly charge the refrigerant |
| | | Non -condensed gas during the cycle | Check each temperature and each pressure | Charge the refrigerant after the vacuum pumping |
| | | Discharge pipe clogged | Check the clogging | Remove the clogging |
| | | Clogging of the strainer | Check for clogging (Symptom: You can appreciate a temperature gradient between strainer inlet and outlet) | Clean or replace the strainer |
| | | Clogging of the heat exchanger | Check for clogging | Remove the clogging |
| | | Failure or malfunction of the expansion valve | Check the connection cord and the connector | Replace the connector |
| | | | Is there an operation sound from the coil? | Replace the coil |
| | | | Is the thermistor for the compressor normal? | Replace the themistor or pressure sensor |
| | | | Is the thermistor correctly installed on the suction pipe? | Install correctly the thermistor |
| | | Excessively high water inlet temperature | Check water temperature | Refer to the customer |
| | Failure fan motor (not running) | | Measure the motor´s terminals resistance | Replace fan motor |
| | Excessively high suction pressure | Malfunction or internal leakage of the 4-way valve | Check the temperature difference between the inlet and outlet of the 4-way valve | Replace the 4-way valve |



Все каталоги и инструкции здесь: https://splitsystema48.ru/instrukcii-po-ekspluatacii-kondicionerov.html

**Abnormal operation of the devices (Cont.)**

| Observed failure | Cause | | Check item | Action (Turn OFF the main switch) |
|---|---|---|---|---|
| Cooling mode (1 minute power on) | Excessively high discharge gas temperature | Too much super-heat | Clogging of the expansion valve | Replace the expansion valve |
| | | | Clogging of the strainer | Clean or repair the strainer |
| | | | Malfunction or internal leakage of the 4-way valve | Replace the 4-way valve |
| | | Excessively high suction gas temperature | Gas leakage or insufficient refrigerant | Replace the 4-way valve |
| | | Td. thermistor failure | Measure the thermistor resistence | Replace thermistor |
| | | Failure solenoid valve for liquid injection | Check the solenoid valve activation | Replace the solenoid valve |
| | | Clogging of the liquid injection capillary tube | Check for clogging | Replace capilary |
| Blown out fuse at the pump suction | Pump block | | Check water freezing or clogging | Removes the clogging |
| | Over current of the pump | | Check pump current | Replace the pump |
| Freeze protection control activated | Insufficient water flow | | Check inlet and outlet water temperature difference | Increase the water flow |
| | Pump reverse rotation | | Check pump running direction | Connect correctly the pump wiring |
| | Air mixed in the water | | Check air purger | Empty the air contained |
| | Water inlet and outlet temperature themistor failure | | Measure the thermistor resistance | Replace the thermistor |
| | Pump reverse rotation | | Check the rotation direction | Change rotation direction |
| | Water outlet temperature excessively low | | Check that water outlet temperature is not out of working range | Check correct installation |
| | Clogging of the water strainer | | Check the water strainer | Remove the clogging |
| | Clogging of the water side heat exchanger | | Check the water side heat exchanger | Chemical cleannig |
| | Malfunction of the low pressure sensor | | Sensor wiring - Check the sensor characteristics | Fix wire. Replace low pressure sensor |
| | Gas leakage or low quantity of refrigerant | | Check leakage and super-heat | Charge correctly the refrigerant quantity |





Все каталоги и инструкции здесь: https://splitsystema48.ru/instrukcii-po-ekspluatacii-kondicionerov.html

**Abnormal operation of the devices (Cont.)**

| Observed failure | Cause | | Check item | Action (Turn OFF the main switch) |
|---|---|---|---|---|
| Unit stopped in heating operation | High cut caused by Pd (high pressure) surpassing | Insufficient water flow | Check the water temperature difference between inlet and outlet | Increase the water flow |
| | | Too much refrigerant | Check clogging of discharge side pipe | Remove the clogging |
| | | Clogging of the expansion valve | Check clogging of discharge side pipe | Remove the clogging |
| | | Clogging strainer (not water) | Check the temperature difference before/after strainer | Replace or cleaning strainer |
| | | Clogging of the 4-way valve | Check the clogging | Remove the clogging or replace the 4-way valve |
| | | Water scale attaching inside the water side heat exchanger | Check the water side exchanger | Chemical cleaning |
| | | Excessively high water outlet temperature | Check water temperature | Check the installation |
| | Excessively high discharge gas temperature (too much super-heat) | Malfunction of the 4-way valve and also internal leakage | Check gas leakage or shortage of refrigerant | Replace the 4-way valve |
| | | | Malfunction of check valve | Replace check valve |
| | | | Clogging of the expansion valve | Remove the clogging |
| | | | Clogging of the refrigerant side strainer | Replace or clean the strainer |
| | | Failure discharge gas temperature thermistor | Measure the resistance of thermistor | Replace the thermistor |
| | | Failure liquid bypass solenoid valve | Check solenoid valve | Replace the solenoid valve |
| | | Clogging of the solenoid liquid solenoid bypass capilary | Clogging of capilary | Replace capilary |
| | Over current compressor | Excesive current consumption | Voltage supply too high/ low | Check the limits in "working range". (I-III phase) |
| | | | Check the interface impedance or power supply | Measure each interface voltage & contact the electrical coMPany |
| | | | Excessively high pressure in the high pressure sensor | Check the cause |
| | | Single or double phase operation (only 3 phase model) | Check the main fuse | Replace the fuse |
| | | | Check the loose of the screw power supply terminal | Tighten the screw |
| | | | Check contact point or magnetic contact for compressor | Replace magnetic contact |



Все каталоги и инструкции здесь: https://splitsystema48.ru/instrukcii-po-ekspluatacii-kondicionerov.html

**Abnormal operation of the devices (Cont.)**

| Observed failure | Cause | | Check item | Action (Turn OFF the main switch) |
|---|---|---|---|---|
| | Over current compressor | Failure compressor bearing | Check bearing seal state | Replace the compressor |
| | | Failure in the compressor motor insulation | Check insulation resistance | Replace the compressor (option "replace the insulation") |
| | | Failure current sensor for compressor | Check the connector | Repair the wiring connection or replace the current sensor |
| | Blown out fuse at the pump circuit | Blocked pump | Check if there exist any solid particle, or iced water | Chemical cleaning of the foreign particle |
| | | Failure of the magnetic contact of the pump | Check the magnetic contact | replace the magnetic contact |
| A lot of ice is attached on the airside (heating mode heat exchanger) | Automatic defrost is de-activated | Failure of the thermistor | Measure the resistance of the thermistor | Replace the thermistor |
| | | Failure of the 4-way valve | Check the activation 4-way valve | Replace the 4-way valve |
| | Short circuited | | Check obstacles around the unit | Remove the obstacles |
| | Failure of the low pressure sensor | | Check the display pressure and actual pressure | Remove the low pressure sensor |
| | Unit is in ice condition | | - | Perform manual defrosting |
| Unit is stopped by highcut in defrost operation | Failure of high pressure sensor | | Check the pressure & actual value of the high pressure sensor | Replace high pressure sensor |





Все каталоги и инструкции здесь: https://splitsystema48.ru/instrukcii-po-ekspluatacii-kondicionerov.html

**Abnormal operation of the devices (Cont.)**

| Observed failure | Cause | | Check item | Action (Turn OFF the main switch) |
|---|---|---|---|---|
| Insufficient heating process | Heating load is higher than heating capacity | | Check the heating load | Install an adequate size unit |
| | Excessively low suction pressure | Gas leakage | Check gas leakage & super-heat | Charge correctly the quantity of refrigerant |
| | Clogging of the expansion valve | | Check the clogging of expansion valve | Remove clogging |
| | Clogging of the strainer | | Check temperature difference before/after strainer | Clean or replace the strainer |
| | Clogging of side low pressure pipe | | Check the temperature difference of each pipe | Remove the clogging |
| | Malfunction of the check valve | | Check the difference temperature before/after check valve | Replace the check valve |
| | Shortage air flow in the air side heat exchanger | | Excessively dust in airside heat exchanger | Remove it |
| | | | Clogging of the inlet/ outlet at the air side heat exchanger is clock | |
| | | | Shortage the service space for Yutake unit | Secure service space |
| | | | Device rotation fan motor | Correct wiring of the fan motor |
| | Air temperature through heat exchanger air flow | | Check the air short circuit | Repair short circuit |
| | Defrosting it is not enough | | Check the evaporating thermistor | Replace the thermistor |
| | | | Check the 4-way valve | Replay 4-way valve |
| | Excessively high discharge pressure | Shortage of waterflow | Check the difference of temperature between inelet/outlet of the unit | Increase the water flow |
| | | Pump reverse rotation | Check the rotation direction | Correct the direction |
| | | Air mixing in the water | Check air purger | Empty the air contained |
| | | Excessively high hot water temperature | Check the water thermistor of the unit | Replace the water thermistor or PCB |
| | | Refrigerant excessively discharged | Check refrigerant cycle temperature | Charge the correct quantity |



Все каталоги и инструкции здесь: https://splitsystema48.ru/instrukcii-po-ekspluatacii-kondicionerov.html

**Abnormal operation of the devices (Cont.)**

| Observed failure | Cause | | Check item | Action (Turn OFF the main switch) |
|---|---|---|---|---|
| Insufficient heating process | Excessively high discharge pressure | Non-condensable gas in the refrigerant cycle | Turn off the unit & check the relation between temperature and pressure | Evacuate and charge refrigerant again |
| | | Clogging of the high pressure pipe | Check the clogging | Remove ghe clogging |
| | | Clogging of the expansion valve | Check the clogging | Remove the clogging |
| | | Clogging of the strainer | Check the difference temperature before/after strainer | Replace the strainer |
| | | Water scale is attached in the water side heat exchanger | Check the heat exchanger | Chemical cleaning |
| | | Malfunction or internal leakage of the 4-way valve | Check the difference temp. between inlet & outlet of the 4-way valve | Replace the 4-way valve |
| | | Wiring failure of the 4-way valve | Check the electrical continuity at the termilnals | Repair wiring or replace 4-way valve |
| | | Failure compressor | Check pressure cycle temperature & running current | Replace the compressor |
| Unit is running but does not make any sound | Unit propeller fan is hitting the shroud | | Visually inspect it | Adjust the position of the propeller fan |
| | Abnormal sound form the compressor | Faulty installation | Check that each part is tightly fixed | Tightly fix each part |
| | | Liquid ref. compression | Adjust the suction gas temperature and pressure | Ensure super-heat |
| | | Wear or breakage of the internal compressor parts | Abnormal sound from the inside of the compressor | Replace the compressor |
| | | No heat by the oil heater | Check the resistance of the oil heater and it´s fuse | Replace the oil heater and the fuse |
| | Humming sound from the magnetic conductor | | Check the surface of the contacts | Replace the magnetothermic switch |
| | Abnormal vibration of the cabinets | | Check each fixing screw | Tightly fix each screw |





Все каталоги и инструкции здесь: https://splitsystema48.ru/instrukcii-po-ekspluatacii-kondicionerov.html

### 7.1.3. Incidents of operation

The operation of the heater is bonded to the Yutaki heat pump.

(If that is in default, the heater can be activated only if specific programming controller Yutaki is done). The heater can be activated by the controller Yutaki under request for additional power or temperature.

In case of non-functioning heater should check:

- That signals to the heat pump function.
- That fuse protection heater in a state.
- That the water pressure is at least 1 bar.
- That the water flow is assured permanently.

If the above checks are correct:

- Turn off the heater isolating fuses.
- Open the hood of connecting the heater.
- Check the good son tightening supply and command.

Press firmly on the push rearmament security heat between the 2 relays electrical power to rearm security heat. (It is possible that safety heater thermal be triggered due to a stoppage of water flow).

- Close the door connecting the heater.
- Switch on the power and restart the heat pump.

In case of non-functioning heater, remove the heater and demand its replacement.



Все каталоги и инструкции здесь: https://splitsystema48.ru/instrukcii-po-ekspluatacii-kondicionerov.html

# 7.2. TROUBLESHOOTING PROCEDURE

- **Checking using the 7-segment display.**

**7-seg. display info.**

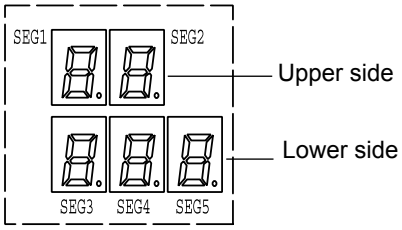


(See the following table for details)

| General Indication | Content |
|---|---|
| 88 | Proceeding Initialization |
| 88 | Power ON (During unit stoppage) |
| PU | Pump Operation (During unit stoppage) |
| PU | Waiting of pump feedback (During unit operation) |
| oF | Stoppage by Thermo-OFF |
| HE | Heating operation (Normal operation) |
| HE↔P0 | Heating operation (Activation of forced compressor frequency control due to low pressure difference:forced up) |
| HE↔P1 | Heating operation (Activation of forced compressor frequency control due to high pressure difference:forced down) |
| HE↔P2 | Heating operation (Activation of forced compressor frequency control due to excessively high discharge pressure: forced down) |
| HE↔P3 | Heating operation (Activation of forced compressor frequency control due to excessively high current :forced down) |
| HE↔P4 | Heating operation (Activation of forced compressor frequency control due to excessively high inverter fin temperature: forced down) |
| P-↔06 | Retry operation (by alarm 02-91, t1) |
| P-↔11 | Retry operation (by alarm 02-e1) |
| P-↔12 | Retry operation (by alarm 02-h1) |
| P-↔17 | Retry operation (by alarm 51, 52, 53, 54) |
| P-↔18 | Retry operation (by alarm 04, 06) |
| E0(Flickering) | Initializing electronic expansion valve |
| Fo | Fan manual operation |





Все каталоги и инструкции здесь: https://splitsystema48.ru/instrukcii-po-ekspluatacii-kondicionerov.html

| Alarm code | Content |
|---|---|
| 02↔H 1 | Activation of high pressure swicth |
| 02↔h 1 | Activation of protection control for excessively high pressure |
| 02↔L 1 | Activation of low pressure control |
| 02↔E 1 | Excessively low pressure difference |
| 02↔b 1 | Excessively high discharge gas temperature |
| 02↔9 1 | Excessively low temperature of heating exchanger refrigerant inlet |
| 02↔t 1 | Excessively low suction gas temperature |
| 04 | Abnormal transmission between Inverter PCB and Main PCB |
| 05 | Abnormality of Power Supply Phase |
| 06 | Excessively low voltage or excessively high voltage for the inverter |
| 11 | Failure of water inlet temperature thermistor |
| 12 | Failure of water outlet temperature thermistor |
| 13 | Activation of freeze protection control (water inlet) |
| 02↔ 13 | Activation of freeze protection control (water outlet) |
| 14 | Excessively high water temperature (compressor running) |
| 21 | Failure of refrigerant evaporating temperature thermistor (Open/Short) |
| 22 | Failure of ambient temperature thermistor (Open/Short) |
| 23 | Failure of discharge gas temperature thermistor (Open/Short) |
| 24 | Failure of refrigerant liquid temperature thermistor (Open/Short) |
| 26 | Failure of suction gas temperature thermistor (Open/Short) |
| 27 | Failure of discharge gas pressure sensor (Open/Short) |
| 28 | Failure of suction gas pressure sensor (Open/Short) |
| 30 | Incorrect PCB Setting |
| 32 | Transmission error between Main PCBs<br>(this alarm code is not available in this model) |
| 40 | Incorrect PCB operation |
| 51 | Abnormal operation of the current sensor |
| 52 | Activation of protection for inverter instantaneous over current |
| 53 | Transistor module protection activation |
| 54 | Increase in the inverter fin temperature |
| 57 | Abnormality of fan motor protection |
| 5P | No feed back signal from water pump |
| 6E | Cooler water failure (this alarm is not available in this unit) |
| 6C | Condenser water failure (this alarm is not available in this unit) |
| PU(flickering) | Excessively high water temperature (compressor stop) |
| FA | Failure of fan motor (MF1) |
| Fb | Failure of fan motor (MF2) |



Все каталоги и инструкции здесь: https://splitsystema48.ru/instrukcii-po-ekspluatacii-kondicionerov.html

### 7.2.1. Alarm code

| Alarm code | Description |
|---|---|
| 02↔H 1 | **Activation of high pressure switch** |

- The alarm code is displayed on the PCB´s display.
  - This alarm code is displayed when the high pressure (Pd) is incresed to more than 4.15 MPa, and high pressure switch (63H) is activated.

**PCB monitoring position: PCB1, PCN5 (See next page)**



Все каталоги и инструкции здесь: https://splitsystema48.ru/instrukcii-po-ekspluatacii-kondicionerov.html

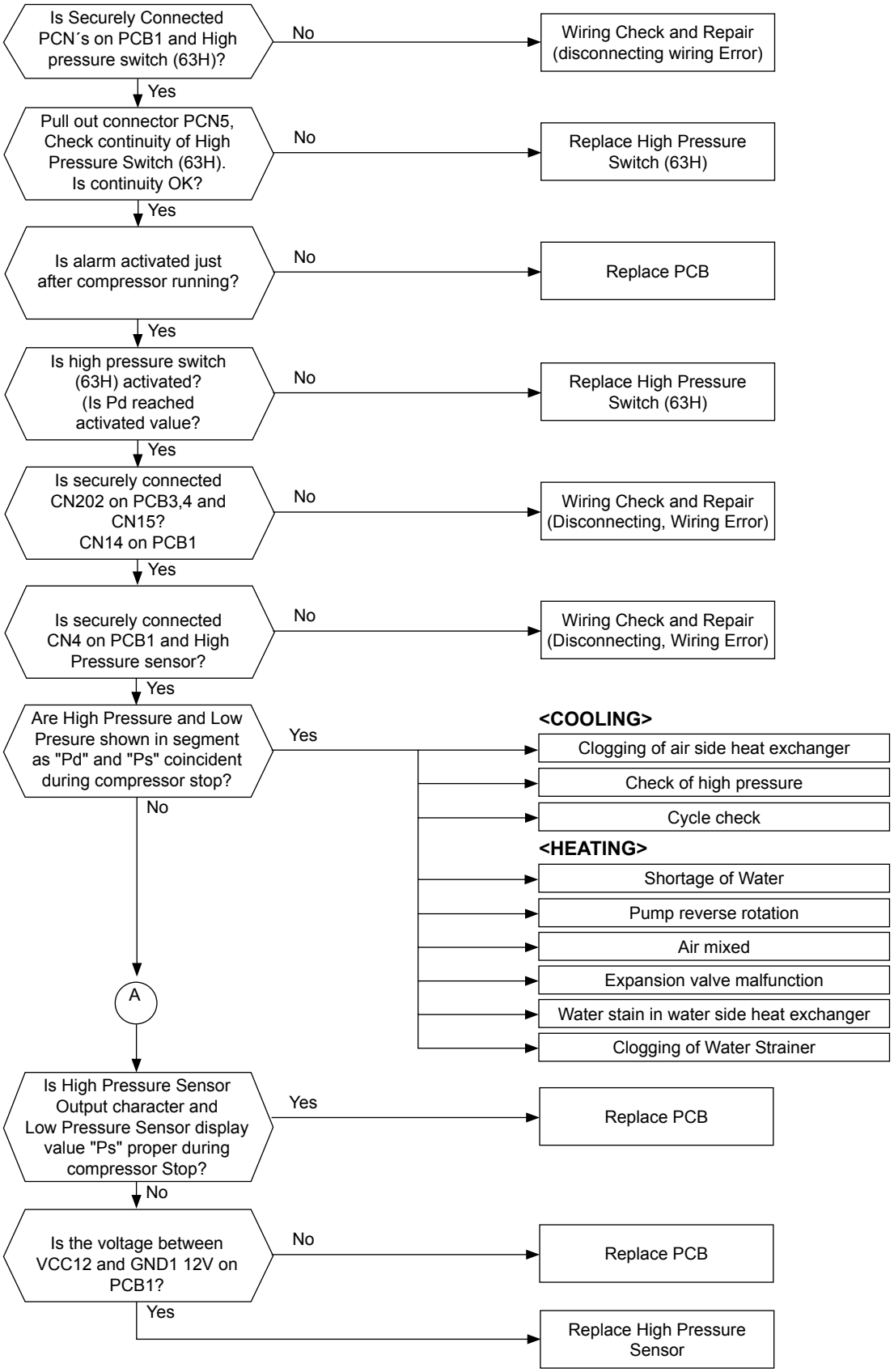


**NOTE**

- *In case that the low pressure is higher than 2.2 MPa, segment shows 2.2 MPa.*
- *In this case, connect a pressure gauge to high pressure check joint, check the pressure shown in the gauge.*



Все каталоги и инструкции здесь: https://splitsystema48.ru/instrukcii-po-ekspluatacii-kondicionerov.html

| Alarm code | Description |
|---|---|
| 02↔h 1 | **Activation of protection control for excessively high pressure** |

- The alarm code is displayed on the PCB´s display.
- During normal operation, ( in cooling o heating operation mode) the Electronic Control stops and restarts automatically after 3 minutes.
- The Stop alarm appears after 3 retries during 30 minutes.
  - This alarm code is displayed when the high pressure (Pd) is incresed to more than 3.9 MPa, during 10 seconds in compressor running frequency more than 40 Hz or,
  - This alarm code is displayed when the high pressure (Pd) is incresed to more than 3.5 MPa, during 10 seconds in compressor running frequency lees than 40 Hz.

**PCB monitoring position: PCB1, CN4**

**Retry code: P-12**

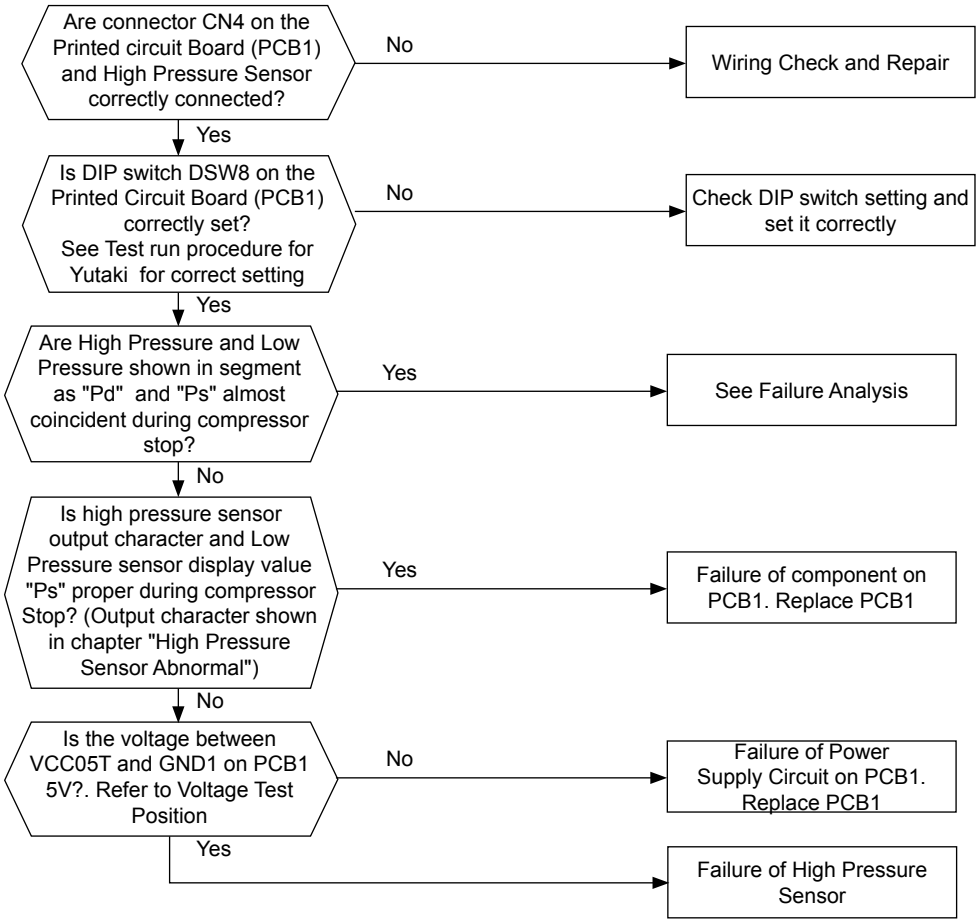


| | NOTE |
|---|---|
| | - *In case that the low pressure is higher than 2.2 MPa, segment shows 2.2 MPa.*<br>- *In this case, connect a pressure gauge to high pressure check joint, check the pressure shown in the gauge.* |



Все каталоги и инструкции здесь: https://splitsystema48.ru/instrukcii-po-ekspluatacii-kondicionerov.html

| Alarm code | Description |
|---|---|
| 02↔L 1 | **Activation of low pressure control** |

- The alarm code is displayed on the PCB´s display.
- It appears The electronic control displays the alarm during the operation in heathing or cooling mode.
  –This alarm code is displayed when the suction pressure (Ps) is less than 0.1 MPa during 3 seconds.

**PCB monitoring position: PCB1, CN3**

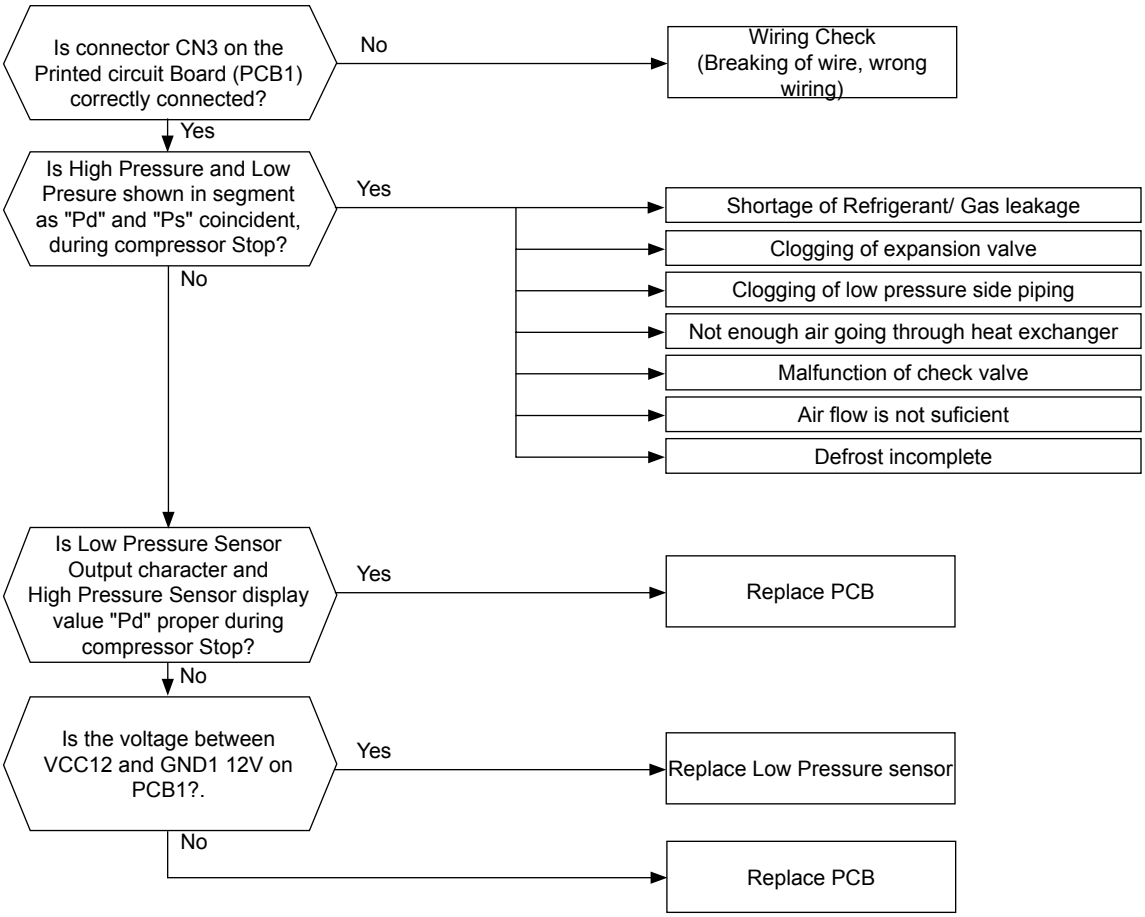


| | NOTE |
|---|---|
| | - *In case that the low pressure is higher than 2.0 MPa, segment shows 2.0 MPa.*<br>- *In this case, check if the high pressure value "Pd" shown in segment is higher than 1.0 MPa.* |



Все каталоги и инструкции здесь: https://splitsystema48.ru/instrukcii-po-ekspluatacii-kondicionerov.html

| Alarm code | Description |
|---|---|
| 02↔E 1 | **Excessively low pressure difference** |

- The alarm code is displayed on the PCB´s display.
- The compressor stops and restarts automatically in 3 minutes.
- The Stop alarm appears after 3 retries during 30 minutes.
  - This alarm code is displayed when the Pressure Ratio calculated from High Pressure "Pd" and Low Pressure "Ps" is less than 1.8 MPa during 3 minutes.

**PCB monitoring position: PCB1, CN3 and CN4**

**Retry code: P-11**

**Calculation Formula for Pressure Ratio:**

$$\text{Pressure Ratio} = \frac{\text{High Pressure "Pd"} + 0.1}{\text{Low Pressure "Ps"} + 0.1}$$

**Example:**

Pd= 1.6 MPa

$$\text{Pressure Ratio} = \frac{1.6 + 0.1}{0.7 + 0.1} = 2.13$$

Ps= 0.7 MPa

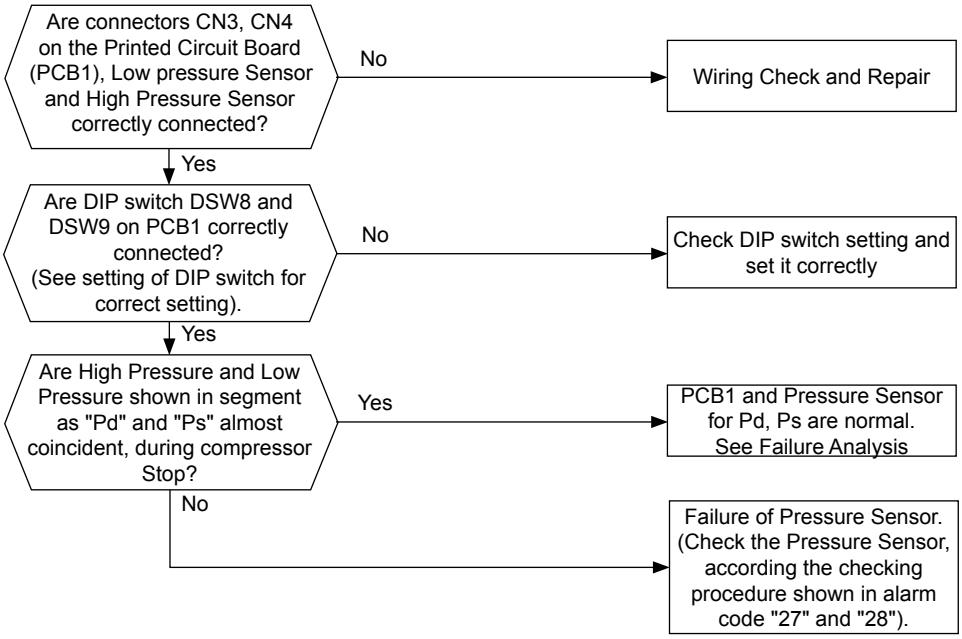


| | NOTE |
|---|---|
| | - *In case that the low pressure is higher than 2.2 MPa, segment shows 2.2 MPa.*<br>- *In this case, connect a pressure gauge to high pressure check joint, check the pressure shown in the gauge.* |



Все каталоги и инструкции здесь: https://splitsystema48.ru/instrukcii-po-ekspluatacii-kondicionerov.html

| Alarm code | Description |
|---|---|
| 02↔61 | **Excessively high discharge gas temperature** |

- The alarm code is displayed on the PCB´s display.
  - This alarm code is displayed when the discharge gas temperature is increased to 120ºC and continues for 10 minutes.
  - The discharge gas, temperature is increased over 140 ºC during more than 5 seconds.

**PCB monitoring position: PCB2, CN15**

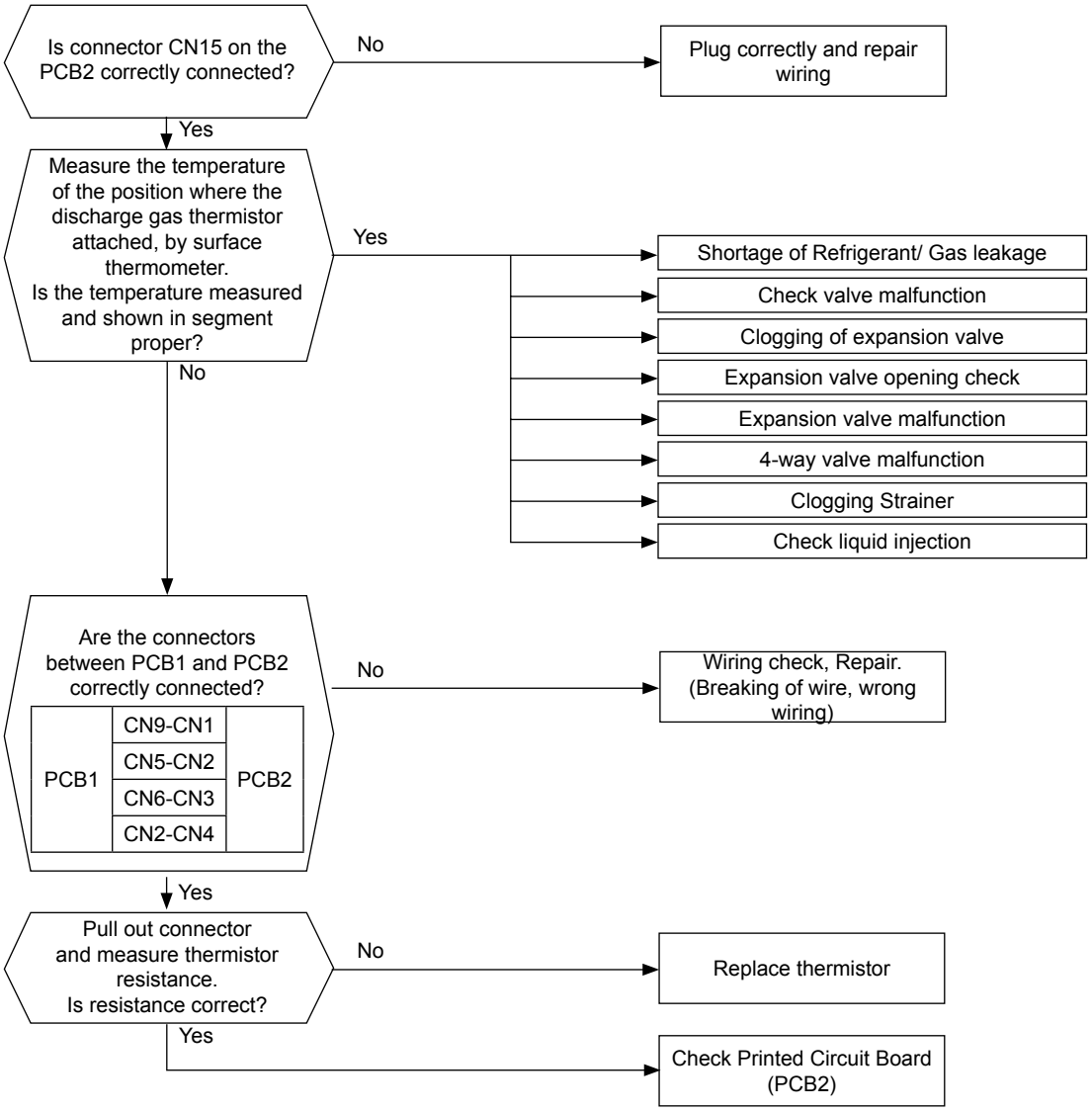




Все каталоги и инструкции здесь: https://splitsystema48.ru/instrukcii-po-ekspluatacii-kondicionerov.html

| Alarm code | Description |
|---|---|
| 02↔91 | **Excessively low temperature of heat exchanger refrigerant inlet** |

- The alarm code is displayed on the PCB´s display.
- The compressor stops and restarts automatically in 3 minutes.
- The alarm appears after 3 retries during 30 minutes.
  - This alarm code is displayed when the Refrigerant temperature in water side heat exchanger inlet (Tp) is less than -6ºC during 3 seconds. (Only for cooling operation).
  - The Refrigerant temperature in water side heat exchanger inlet (Tp) is less than -20ºC during 10 seconds. (Only for defrosting operation). No retry during defrosting operation. Alarm stop immediately.

**PCB monitoring position: PCB2, CN14**

**Retry code: P- 06**

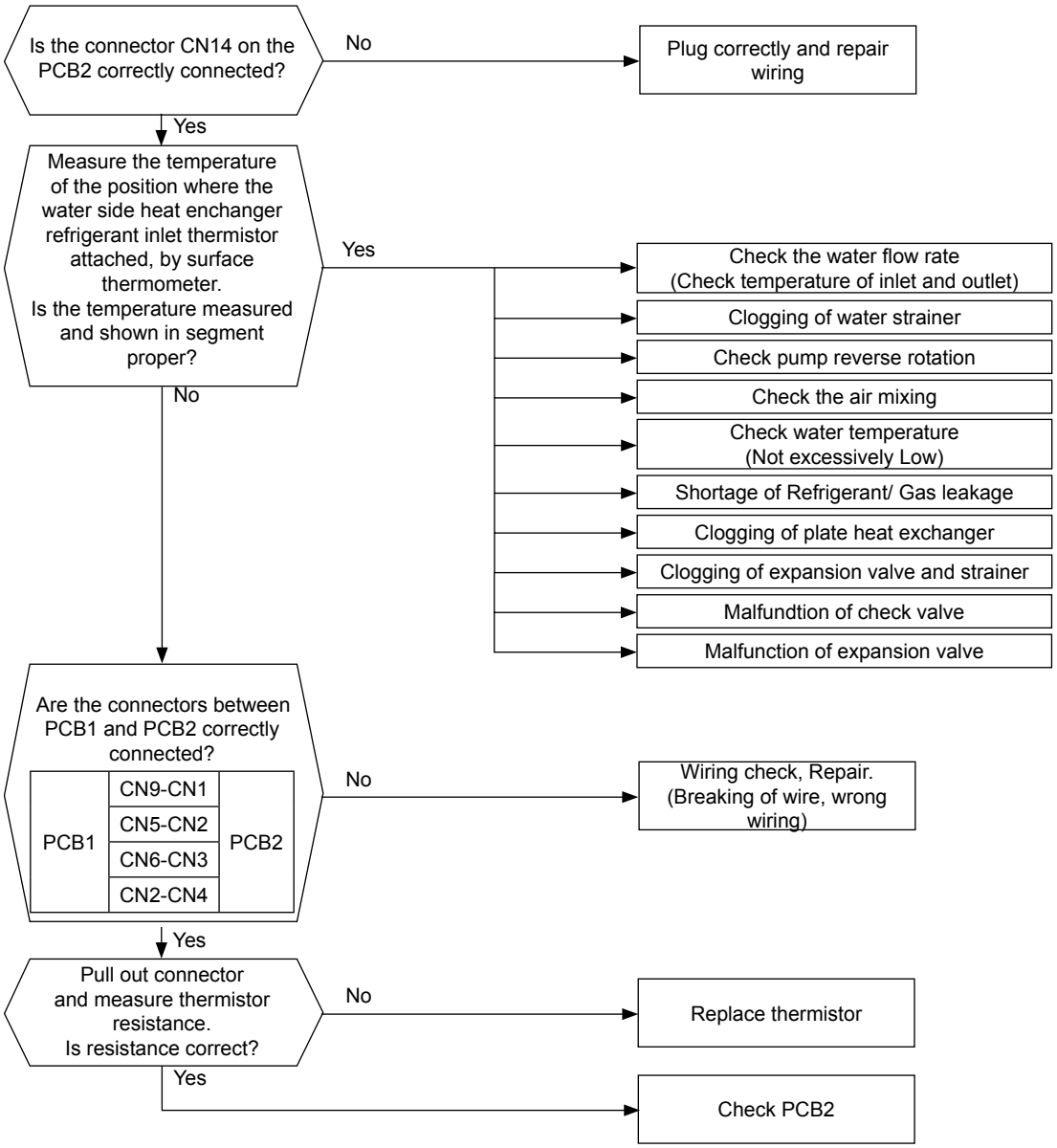




Все каталоги и инструкции здесь: https://splitsystema48.ru/instrukcii-po-ekspluatacii-kondicionerov.html

| Alarm code | Description |
|---|---|
| 02↔t 1 | **Excessively low suction gas temperature** |

- The alarm code is displayed on the PCB´s display.
- The compressor stops and restarts automatically in 3 minutes.
- The alarm appears after 3 retries during 30 minutes.
  – This alarm code is displayed when the suction gas temperature (Ts) is lower than -5ºC during 10 seconds. (Only cooling operation).

**PCB monitoring position: PCB2, CN11**

**Retry code: P-06**

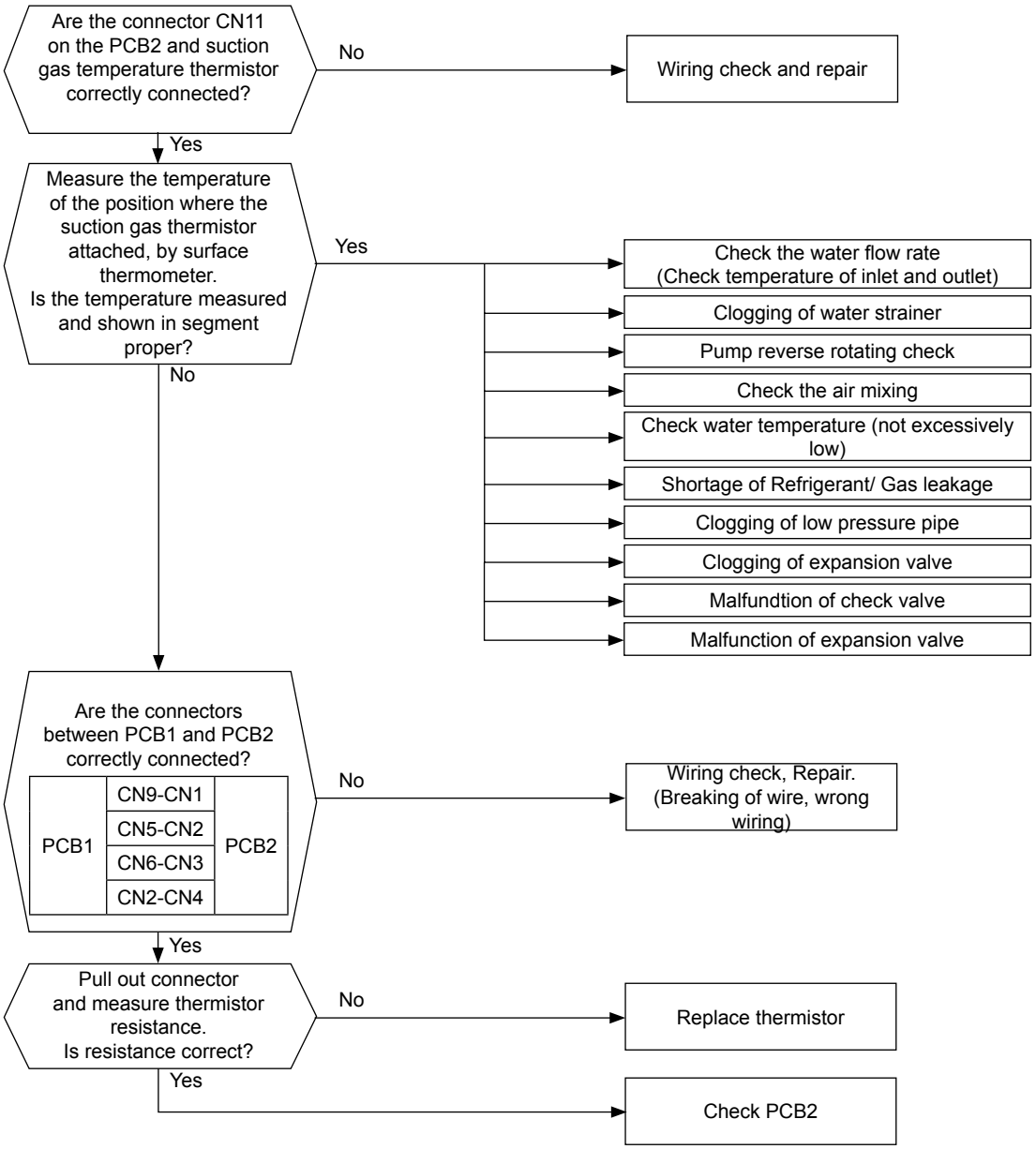




Все каталоги и инструкции здесь: https://splitsystema48.ru/instrukcii-po-ekspluatacii-kondicionerov.html

| Alarm code | Description |
|---|---|
| 04 | **Abnormal transmission between Inverter PCB and Main PCB** |

- The alarm code is displayed on the PCB´s display.
  – This alarm code is displayed when the communication between Main PCB (PCB1) and Inverter (DIP- IPM/ISPM) is not performed correctly during 30 seconds.

**PCB monitoring position: PCB1, CN8**

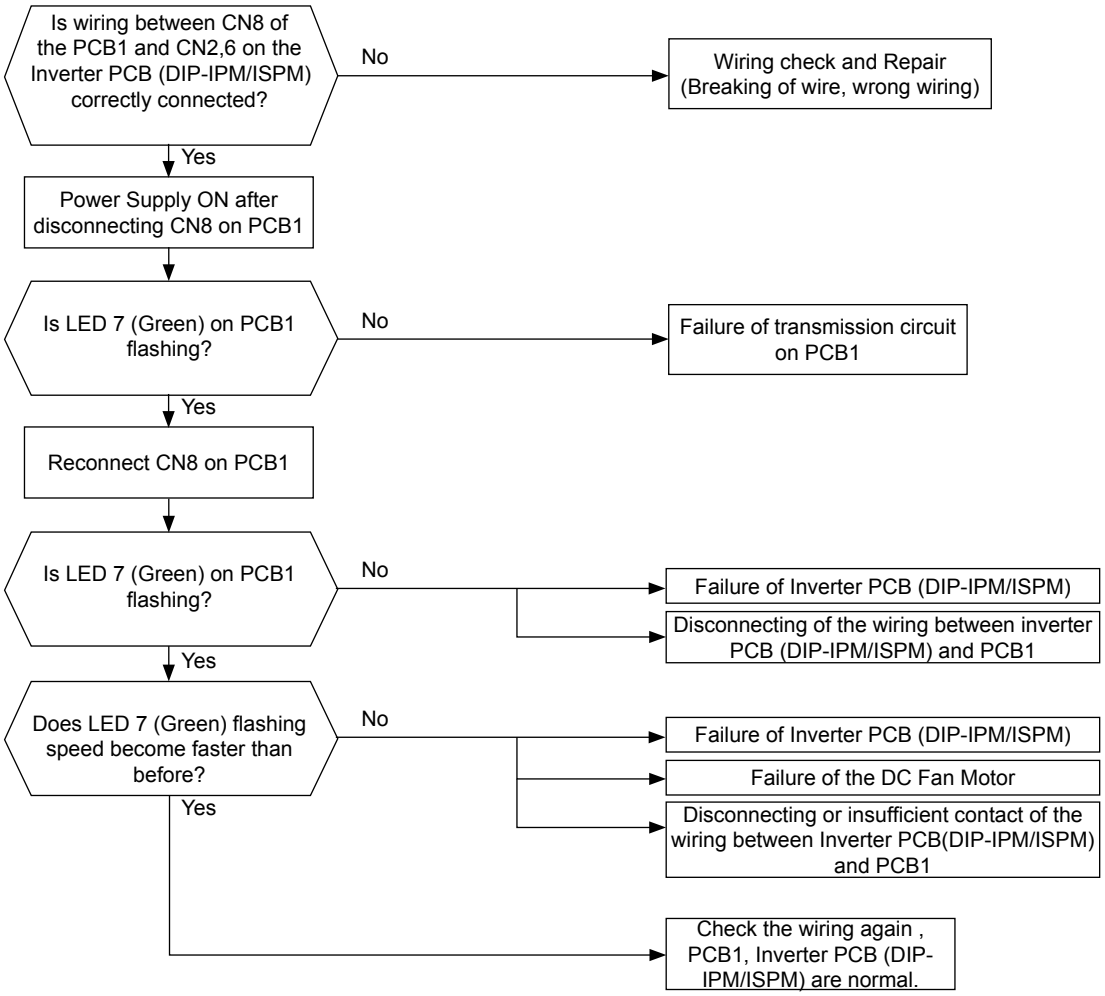






Все каталоги и инструкции здесь: https://splitsystema48.ru/instrukcii-po-ekspluatacii-kondicionerov.html

| Alarm code | Description |
|---|---|
| 05 | **Abnormality of Power Supply Phase** |

- The alarm code is displayed on the PCB´s display.
  – This alarm code is displayed when the power source phases are reversely connected or one phase is not connected.

**PCB monitoring position: PCB1, PCN1**

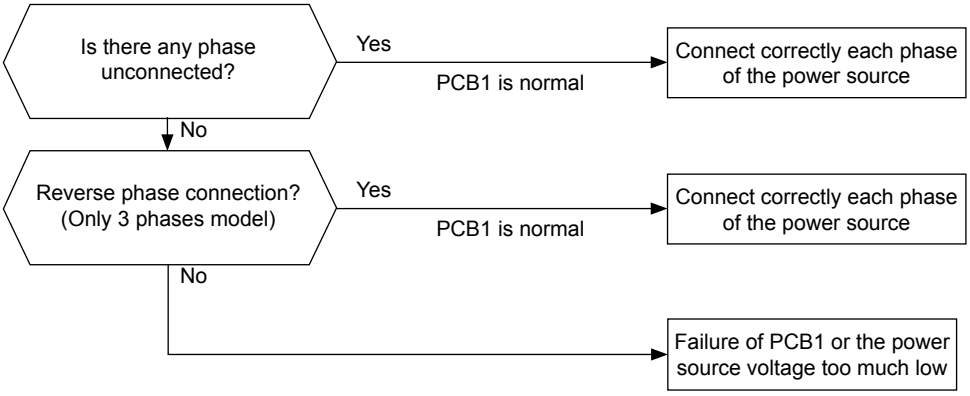


**See below:**

- **RHUE-(5/6)AHN (Three phase)**

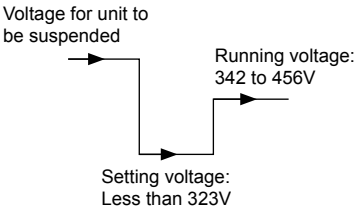


- **RHUE-(3~6)AHN (Single phase)**

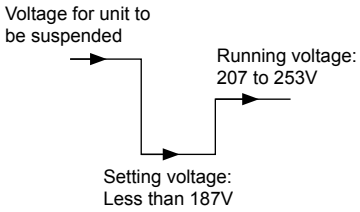




Все каталоги и инструкции здесь: https://splitsystema48.ru/instrukcii-po-ekspluatacii-kondicionerov.html

| Alarm code | Description |
|---|---|
| 06 | **Excessively low voltage or excessively high voltage for the inverter RHUE-(3~6)AVHN** |

- The alarm code is displayed on the PCB´s display.
- The alarm appears after 3 retries during 30 minutes.
  - This alarm code is displayed when the voltage between terminal "P" and "N" of DIP-IPM is insufficient.

**Retry code: P-18**

| ⚠ | ***WARNING*** |
|---|---|
| - *Electrical hazard. Risk of electrical shock. Be extremely carefull because of the high voltage.* | |

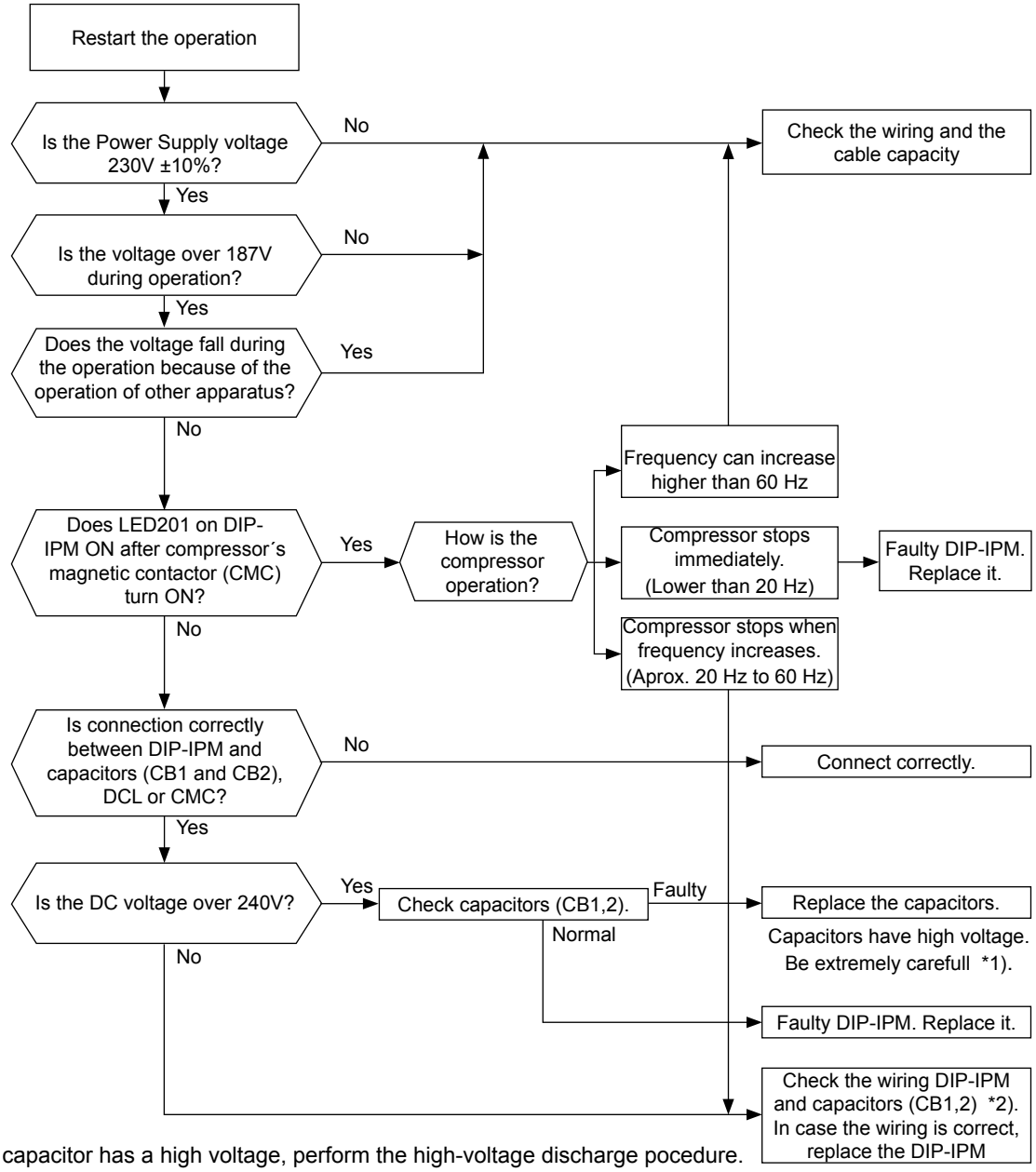


*1): If the capacitor has a high voltage, perform the high-voltage discharge pocedure. Refer to section RHUE-(3~6)AVHN: "Procedure for checking the DIP-IPM".
*2): Checking procedures of the diode module are displayed in item RHUE-(3~6) AVHN: "Procedure for checking the DIP-IPM".



Все каталоги и инструкции здесь: https://splitsystema48.ru/instrukcii-po-ekspluatacii-kondicionerov.html

| Alarm code | Description |
|---|---|
| 06 | **Excessively low voltage or excessively high voltage for the inverter RHUE-(5/6)AHN** |

- The alarm code is displayed on the PCB´s display of the outdoor unit.
- The alarm appears after 3 retries during 30 minutes.
  - This alarm code is displayed when the voltage between terminal "P" and "N" of ISPM is insufficient.

**Retry code: P-18**

| ⚠ | ***WARNING*** |
|---|---|
| - *Electrical hazard. Risk of electrical shock. Be extremely carefull because of the high voltage.* | |

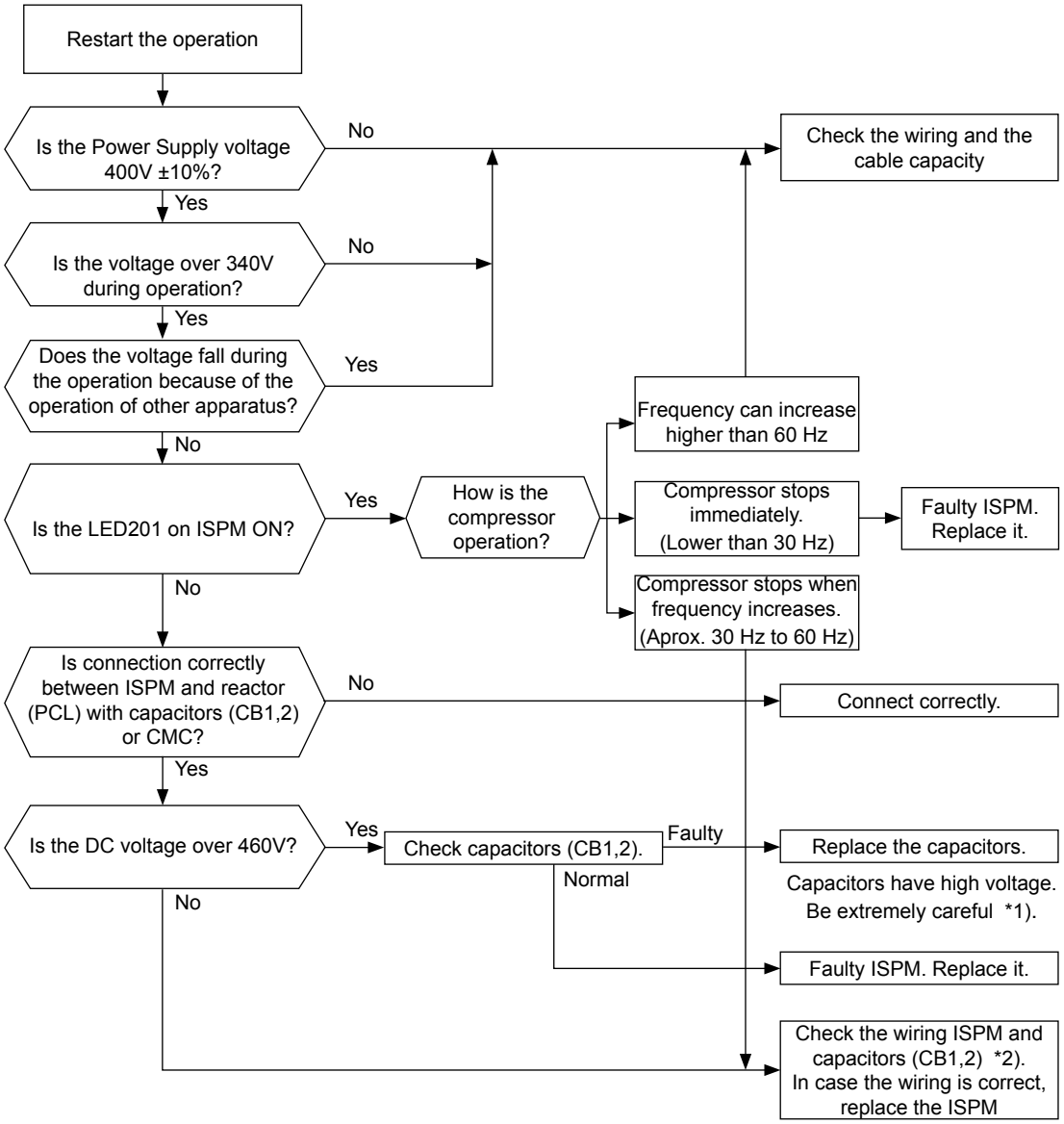


*1): If the capacitor has a high voltage, perform the high-voltage discharge pocedure. Refer to section "RHUE-(5/6)AHN: Procedure for checking the ISPM".
*2): Checking procedures of the diode module are displayed in item "RHUE-(5/6)AHN: Procedure for checking the ISPM".
*3): DC voltage measuring position: ISPM "P" terminal to "+" terminal of tester, "N" terminal to "-" terminal of tester measuring position: DC 1000V.



Все каталоги и инструкции здесь: https://splitsystema48.ru/instrukcii-po-ekspluatacii-kondicionerov.html

| Alarm code | Description |
|---|---|
| 11 | **Failure of water inlet temperature thermistor** |

- The alarm code is displayed on the PCB´s display.
  –This alarm code is displayed when the water inlet temperature thermistor is short circuited or cut.

**PCB monitoring position: PCB2, CN9**

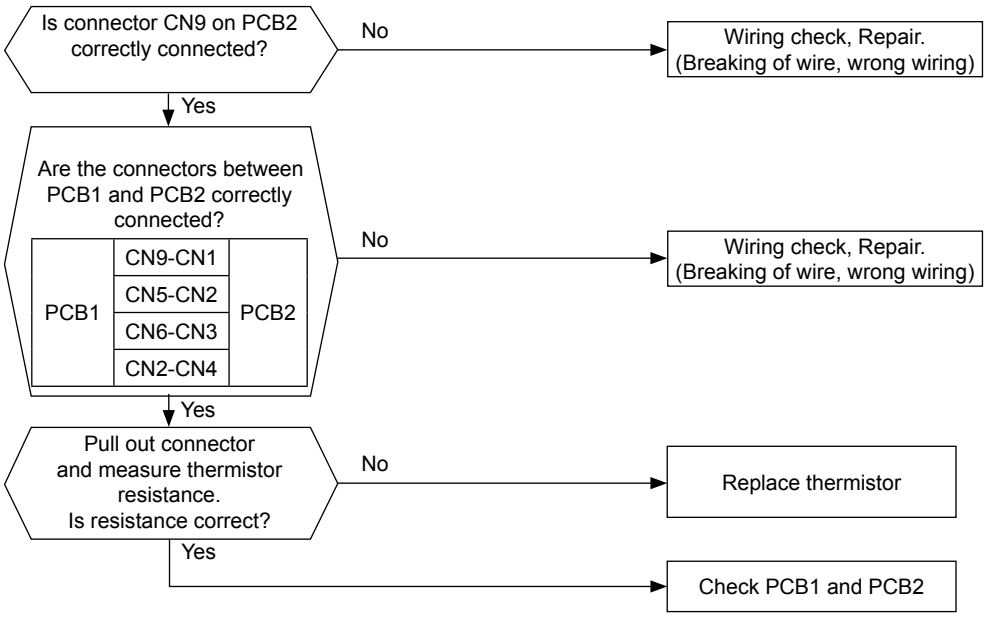


**Measuring the thermistor resistance value:**

**Thermistor characteristics**

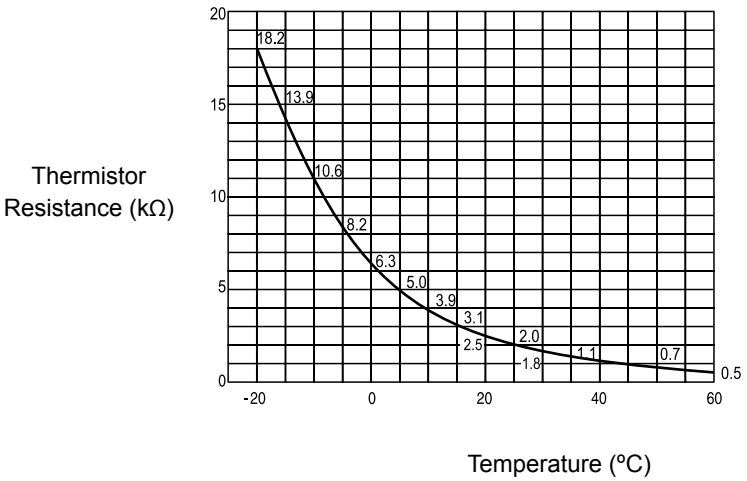


| | NOTE |
|---|---|
| - *Measure the resistance at least in 2 different points which the temperature is different more than 10 ºC.* | |



Все каталоги и инструкции здесь: https://splitsystema48.ru/instrukcii-po-ekspluatacii-kondicionerov.html

| Alarm code | Description |
|---|---|
| 12 | **Failure of water outlet temperature thermistor** |

- The alarm code is displayed on the PCB´s display.
  – This alarm code is displayed when the water outlet temperature thermistor is short circuited or cut.

**PCB monitoring position: PCB2, CN13**

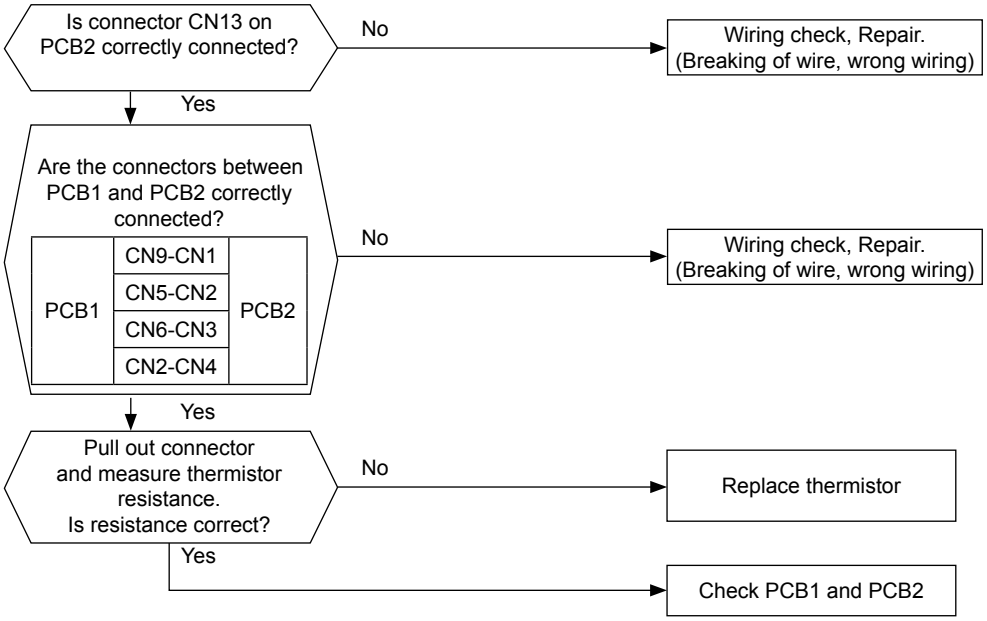


**Measuring the thermistor resistance value:**

**Thermistor characteristics**

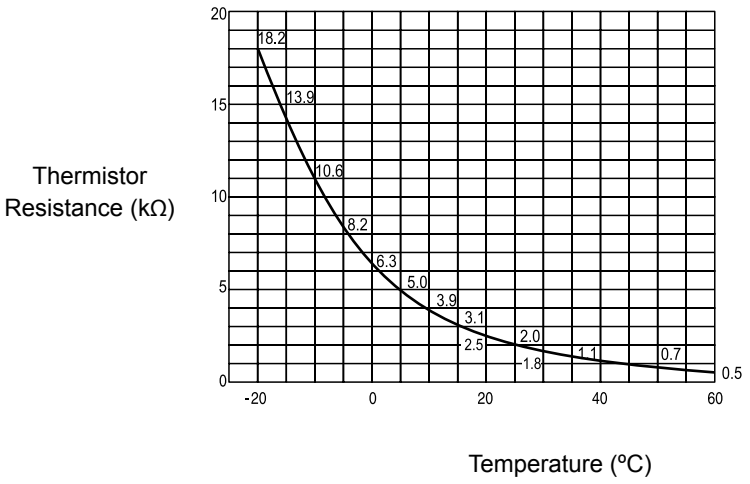


| | NOTE |
|---|---|
| - | *Measure the resistance at least in 2 different points which the temperature is different more than 10 ºC.* |



Все каталоги и инструкции здесь: https://splitsystema48.ru/instrukcii-po-ekspluatacii-kondicionerov.html

| Alarm code | Description |
|---|---|
| 13 | **Activation of freeze protection control (water inlet)** |

- The alarm code is displayed on the PCB´s display.
  –This alarm code is displayed when the chilled water temperature is lower than 2ºC.

**PCB monitoring position: PCB2, CN9**

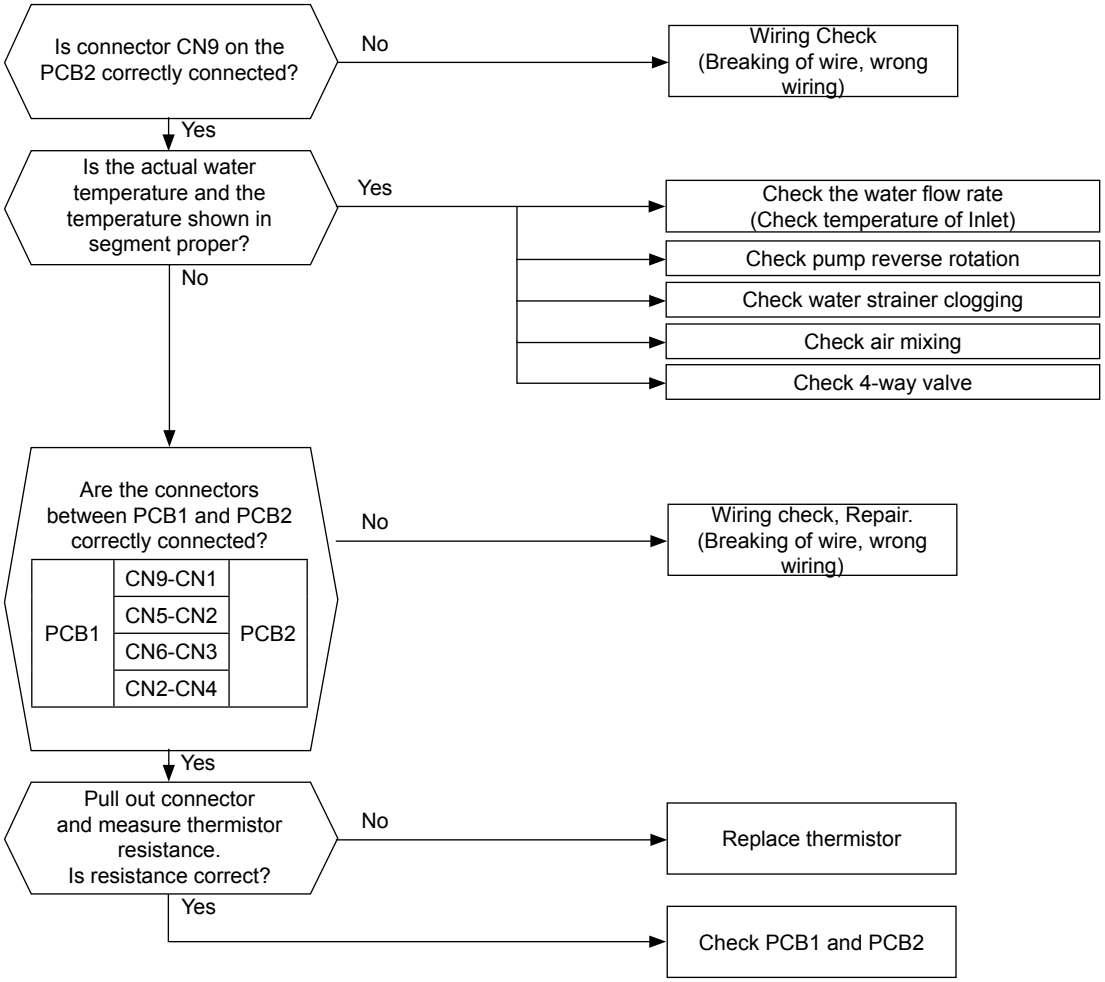




Все каталоги и инструкции здесь: https://splitsystema48.ru/instrukcii-po-ekspluatacii-kondicionerov.html

| Alarm code | Description |
|---|---|
| 02↔ 13 | **Activation of freeze protection control (water outlet)** |

- The alarm code is displayed on the PCB´s display.
  –This alarm code is displayed when the chilled water temperature is lower than 2ºC.

**PCB monitoring position: PCB2, CN13**

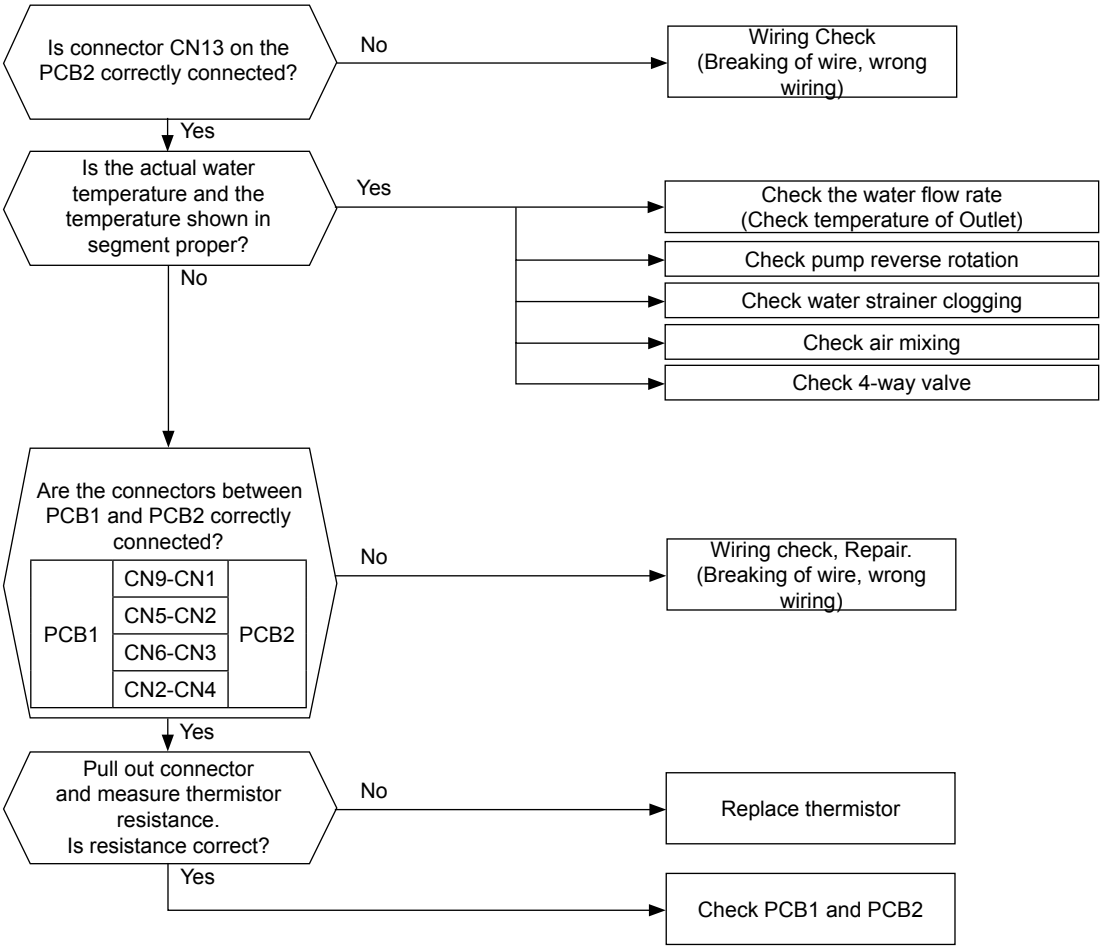




Все каталоги и инструкции здесь: https://splitsystema48.ru/instrukcii-po-ekspluatacii-kondicionerov.html

| Alarm code | Description |
|---|---|
| 14 | **Excessively high water temperature (compressor running)** |

- The alarm code is displayed on the PCB´s display.
  – This alarm code is displayed when the water temperature is above 59ºC during compressor operation. (Only heating operation).

**PCB monitoring position: PCB2, CN9 (Water Inlet)**
**PCB2, CN13 (Water Outlet)**

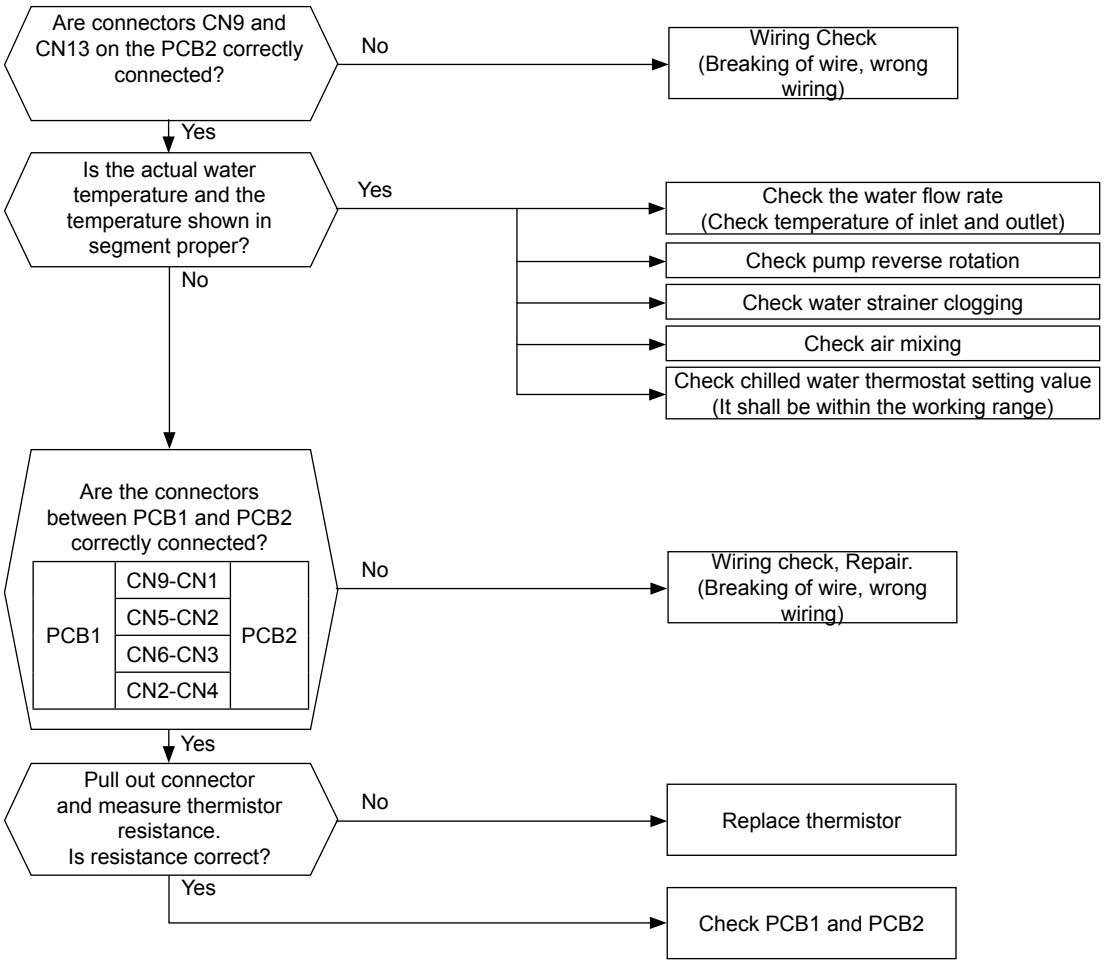


7



Все каталоги и инструкции здесь: https://splitsystema48.ru/instrukcii-po-ekspluatacii-kondicionerov.html

| Alarm code | Description |
|---|---|
| 21 | **Failure of refrigerant liquid temperature thermistor (Open/Short)** |

- The alarm code is displayed on the PCB´s display.
  – This alarm code is displayed when the thermistor is short circuited or cut.

**PCB monitoring position: PCB2, CN14**

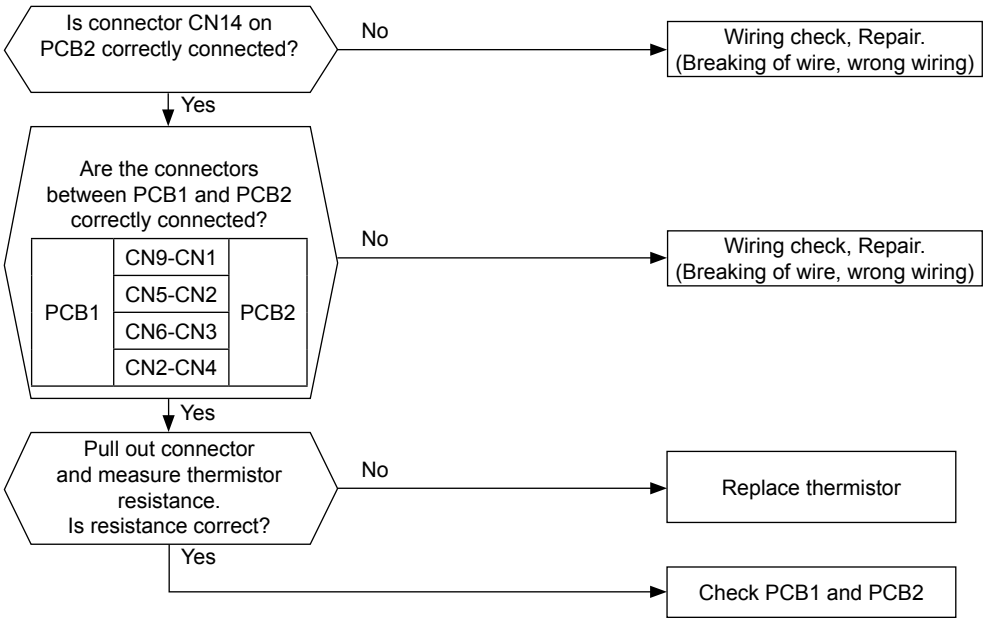


**Measuring the thermistor resistance value:**

**Thermistor characteristics**

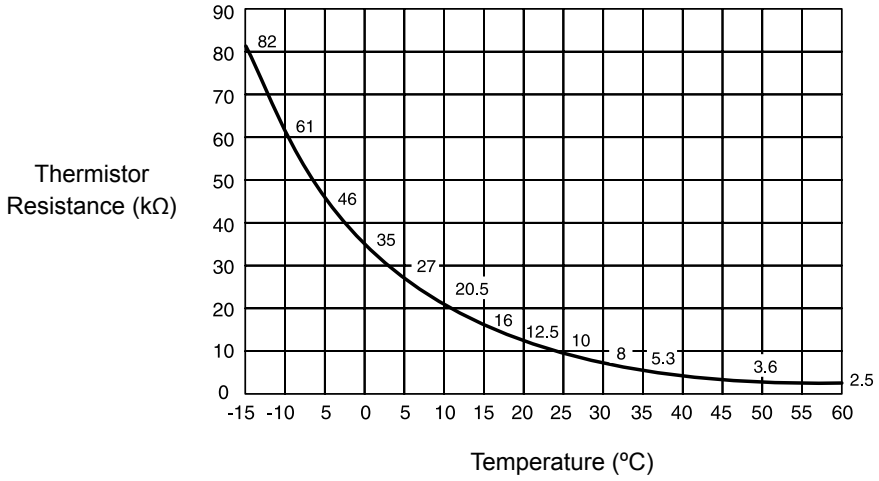


| | NOTE |
|---|---|
| - *Measure the resistance at least in 2 different points which the temperature is different more than 10 ºC.* | |



Все каталоги и инструкции здесь: https://splitsystema48.ru/instrukcii-po-ekspluatacii-kondicionerov.html

| Alarm code | Description |
|---|---|
| 22 | **Failure of ambiente temperature thermistor (Open/short)** |

- The alarm code is displayed on the PCB´s display.
  –This alarm code is displayed when the thermistor is short circuited or cut.

**PCB monitoring position: PCB2, CN10**

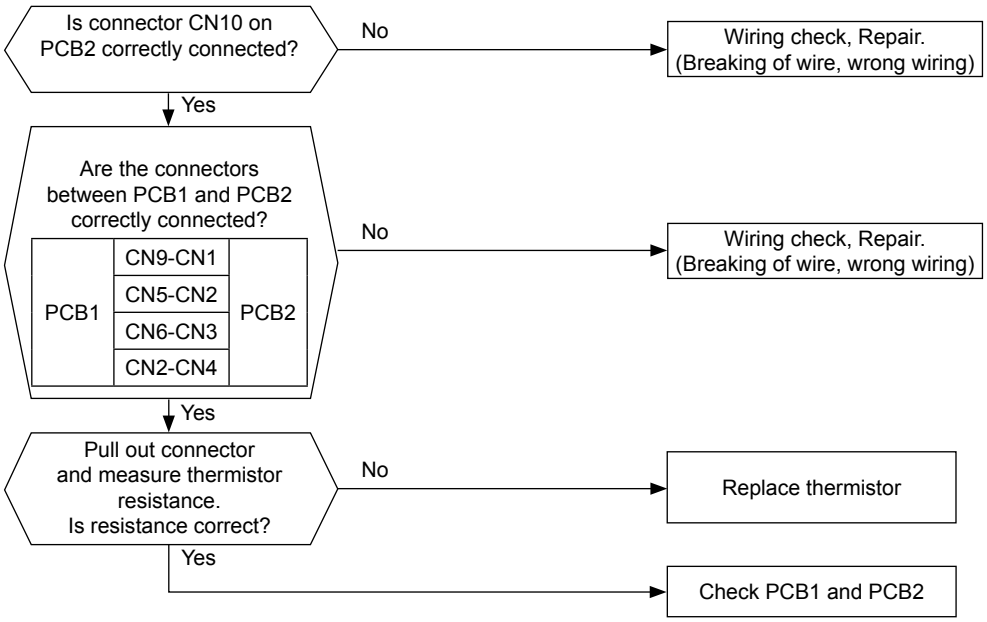


**Measuring the thermistor resistance value:**

**Thermistor characteristics**

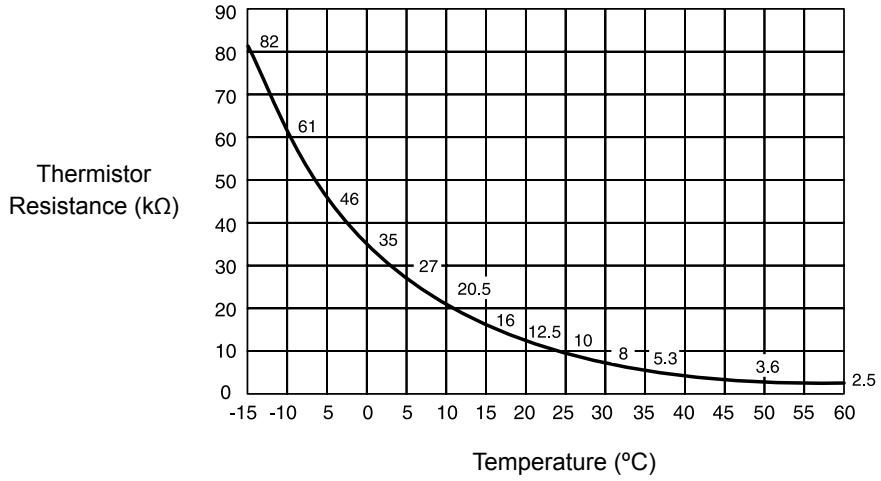


| | NOTE |
|---|---|
| - *Measure the resistance at least in 2 different points which the temperature is different more than 10 ºC.* | |



Все каталоги и инструкции здесь: https://splitsystema48.ru/instrukcii-po-ekspluatacii-kondicionerov.html

| Alarm code | Description |
|---|---|
| 23 | **Failure of discharge gas temperature thermistor (Open/Short)** |

- The alarm code is displayed on the PCB´s display.
  – This alarm code is displayed when the thermistor is short circuited or cut.

**PCB monitoring position: PCB2, CN15**

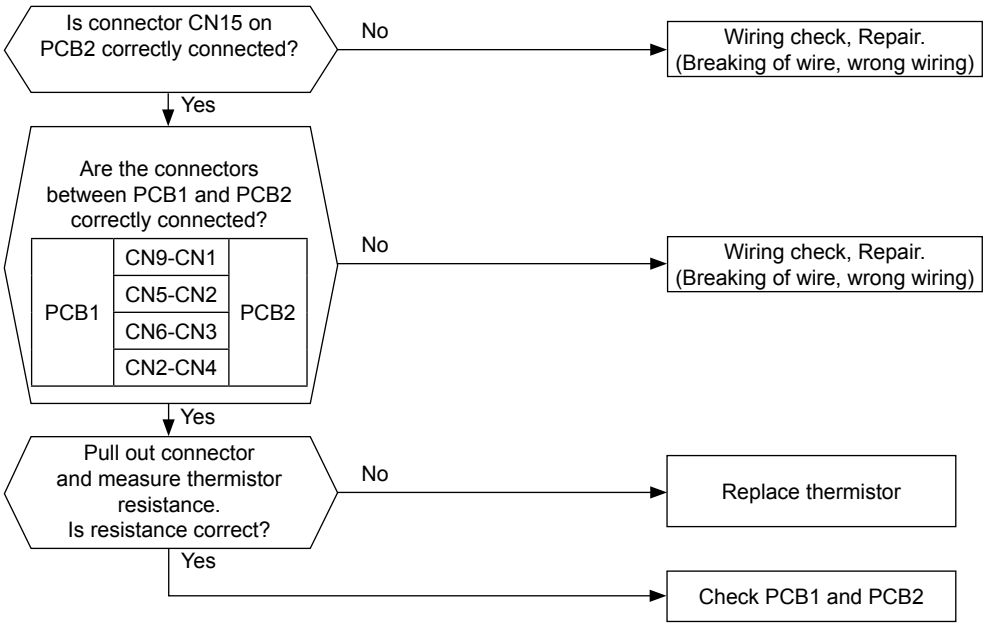


**Measuring the thermistor resistance value:**

**Thermistor characteristics**

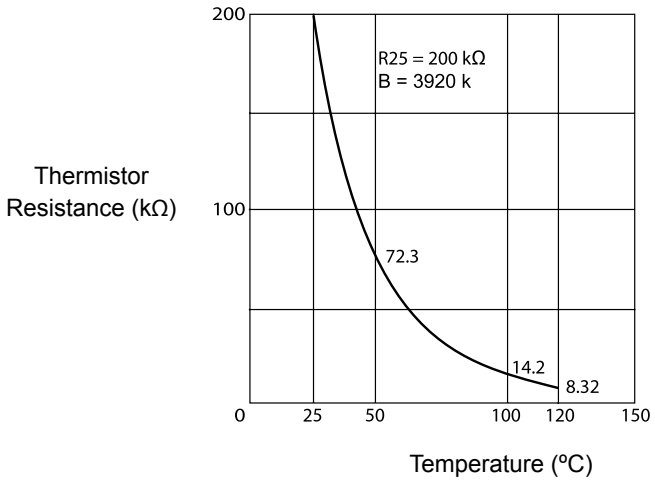


| | NOTE |
|---|---|
| - *Measure the resistance at least in 2 different points which the temperature is different more than 10 ºC.* | |



Все каталоги и инструкции здесь: https://splitsystema48.ru/instrukcii-po-ekspluatacii-kondicionerov.html

| Alarm code | Description |
|---|---|
| 24 | **Failure of refrigerant evaporating temperature thermistor (Open/Short)** |

- The alarm code is displayed on the PCB´s display.
  –This alarm code is displayed when the thermistor is short circuited or cut.

**PCB monitoring position: PCB2, CN12**

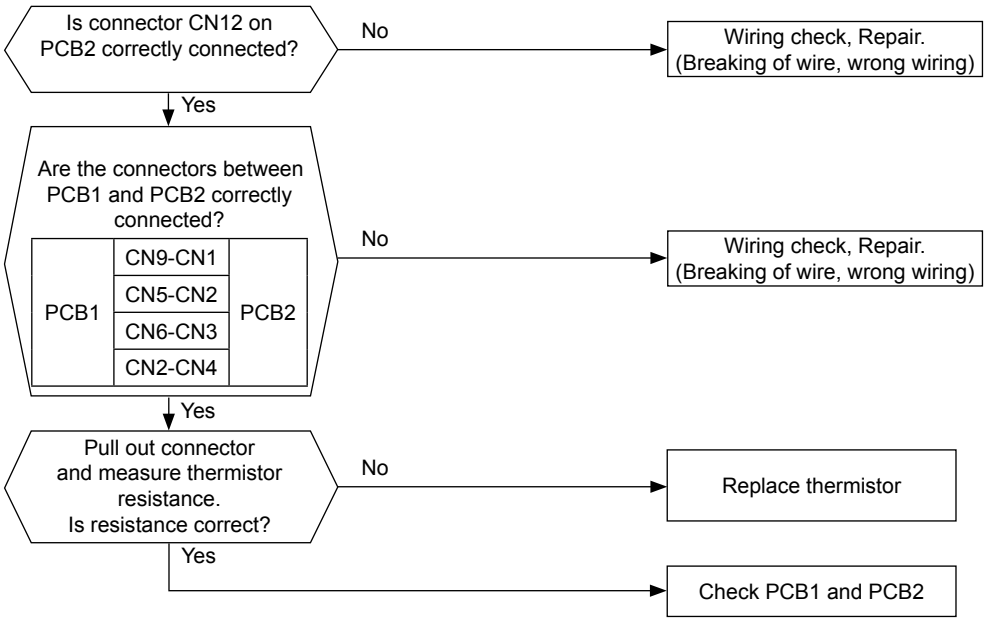


**Measuring the thermistor resistance value:**

**Thermistor characteristics**

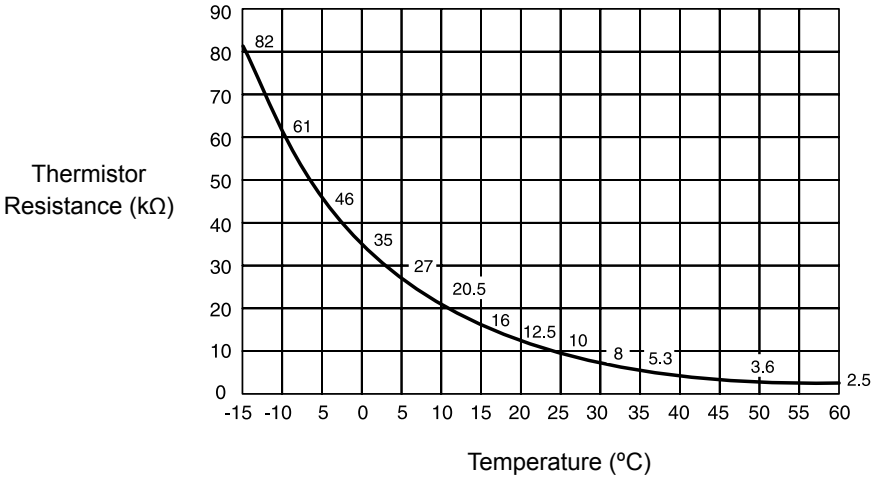


| | NOTE |
|---|---|
| - *Measure the resistance at least in 2 different points which the temperature is different more than 10 ºC.* | |



Все каталоги и инструкции здесь: https://splitsystema48.ru/instrukcii-po-ekspluatacii-kondicionerov.html

| Alarm code | Description |
|---|---|
| 26 | **Failure of suction gas temperature thermistor (Open/Short)** |

- The alarm code is displayed on the PCB´s display.
  –This alarm code is displayed when the thermistor is short circuited or cut.

**PCB monitoring position: PCB2, CN11**

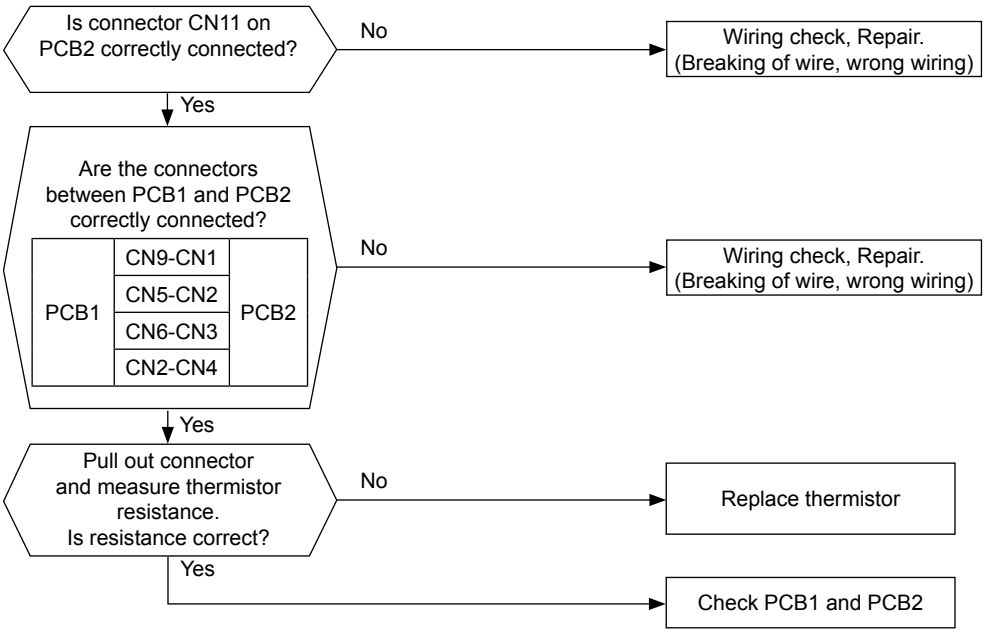


**Measuring the thermistor resistance value:**

**Thermistor characteristics**

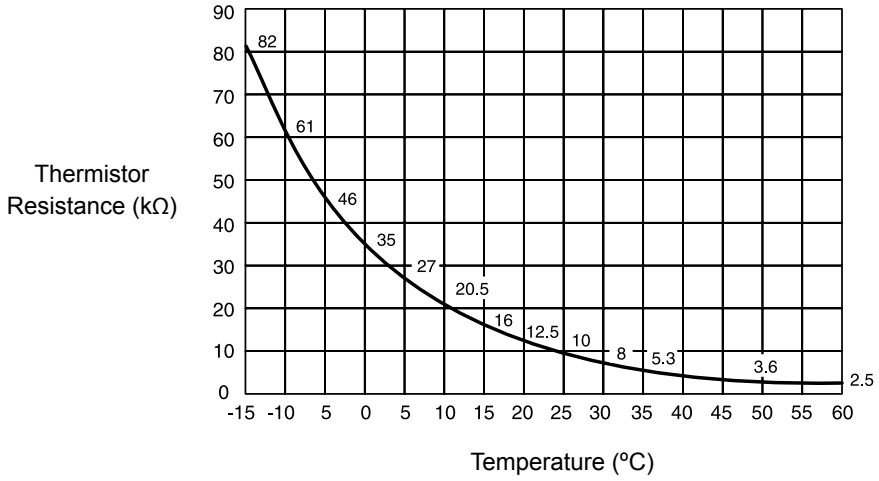


| | NOTE |
|---|---|
| - *Measure the resistance at least in 2 different points which the temperature is different more than 10 ºC.* | |



Все каталоги и инструкции здесь: https://splitsystema48.ru/instrukcii-po-ekspluatacii-kondicionerov.html

| Alarm code | Description |
|---|---|
| 27 | **Failure of discharge gas pressure sensor (Open/Short)** |

- The alarm code is displayed on the PCB´s display.
  –This alarm code is displayed when the high pressure sensor is short circuited or cut.

**PCB monitoring position: PCB1, CN4**

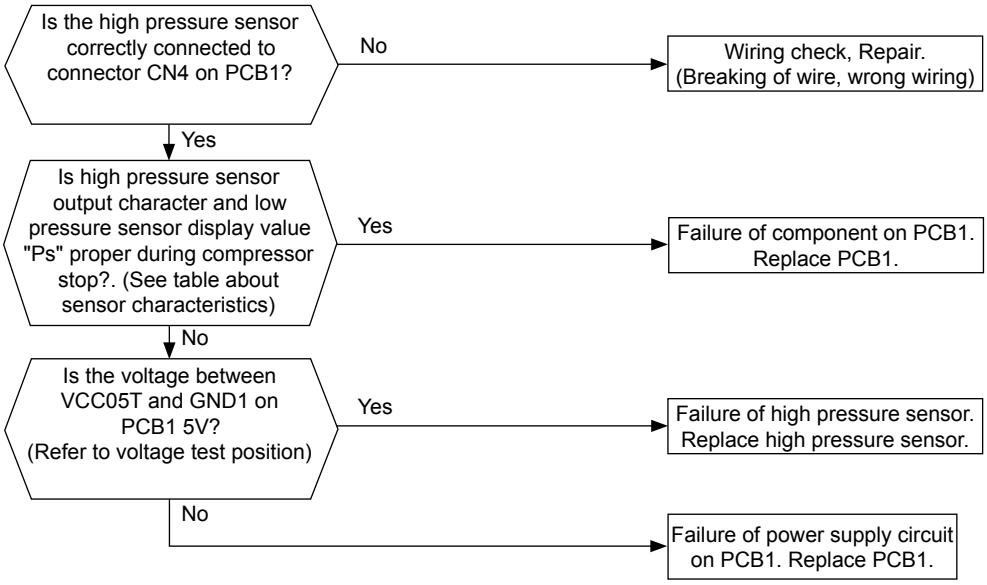


**Characteristics of high pressure sensor**

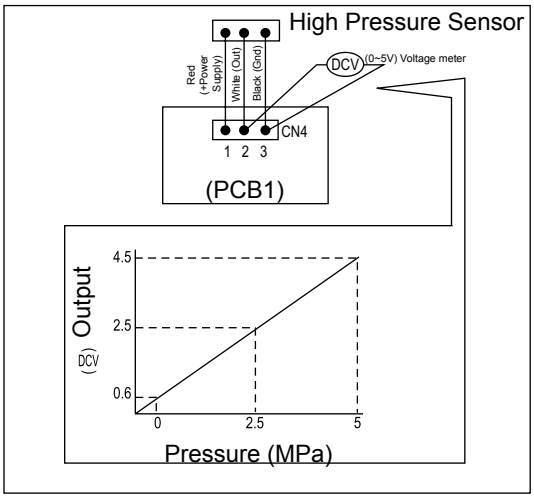


| | NOTE |
|---|---|

- *In case that the low pressure is higher than 2.2 MPa, segment shows 2.2 MPa.*
- *In this case, connect a pressure gauge to high pressure check joint, check the pressure shown in the gauge.*



Все каталоги и инструкции здесь: https://splitsystema48.ru/instrukcii-po-ekspluatacii-kondicionerov.html

| Alarm code | Description |
|---|---|
| 28 | **Failure of suction gas pressure sensor (Open/Short)** |

- The alarm code is displayed on the PCB´s display.
  – This alarm code is displayed when the low pressure sensor is short circuited or cut.

**PCB monitoring position: PCB1, CN3**

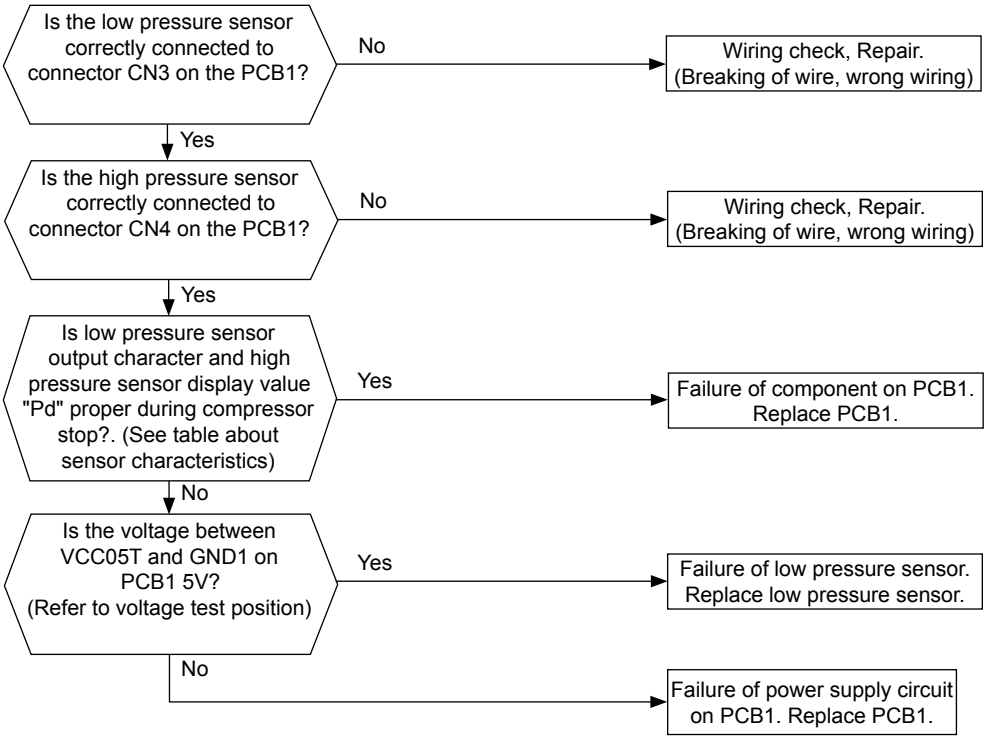


**Characteristics of low pressure sensor**

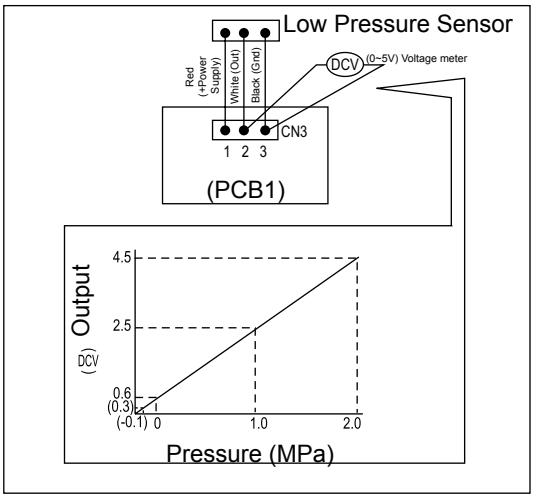




Все каталоги и инструкции здесь: https://splitsystema48.ru/instrukcii-po-ekspluatacii-kondicionerov.html

| Alarm code | Description |
|---|---|
| 30 | **Incorrect PCB Setting** |

- The alarm code is displayed on the PCB´s display.
  –This alarm code is displayed when wrong settings are performed in DIP switches on PCB.

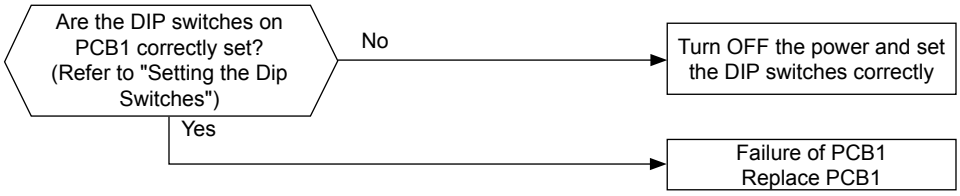



Все каталоги и инструкции здесь: https://splitsystema48.ru/instrukcii-po-ekspluatacii-kondicionerov.html

| Alarm code | Description |
|---|---|
| 32 | **Transmission error between Main PCBs (this alarm code is not available in this unit)** |

- The alarm code is displayed on the PCB´s display.

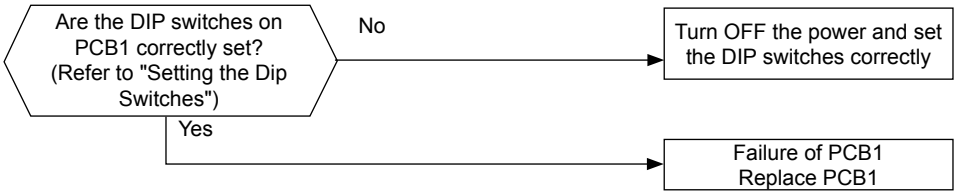




Все каталоги и инструкции здесь: https://splitsystema48.ru/instrukcii-po-ekspluatacii-kondicionerov.html

| Alarm code | Description |
|---|---|
| 40 | **Incorrect operation** |

- The alarm code is displayed on the PCB´s display
  – This alarm code is displayed when wrong settings is performed in DIP switch on PCB or prohibited operation is performed.

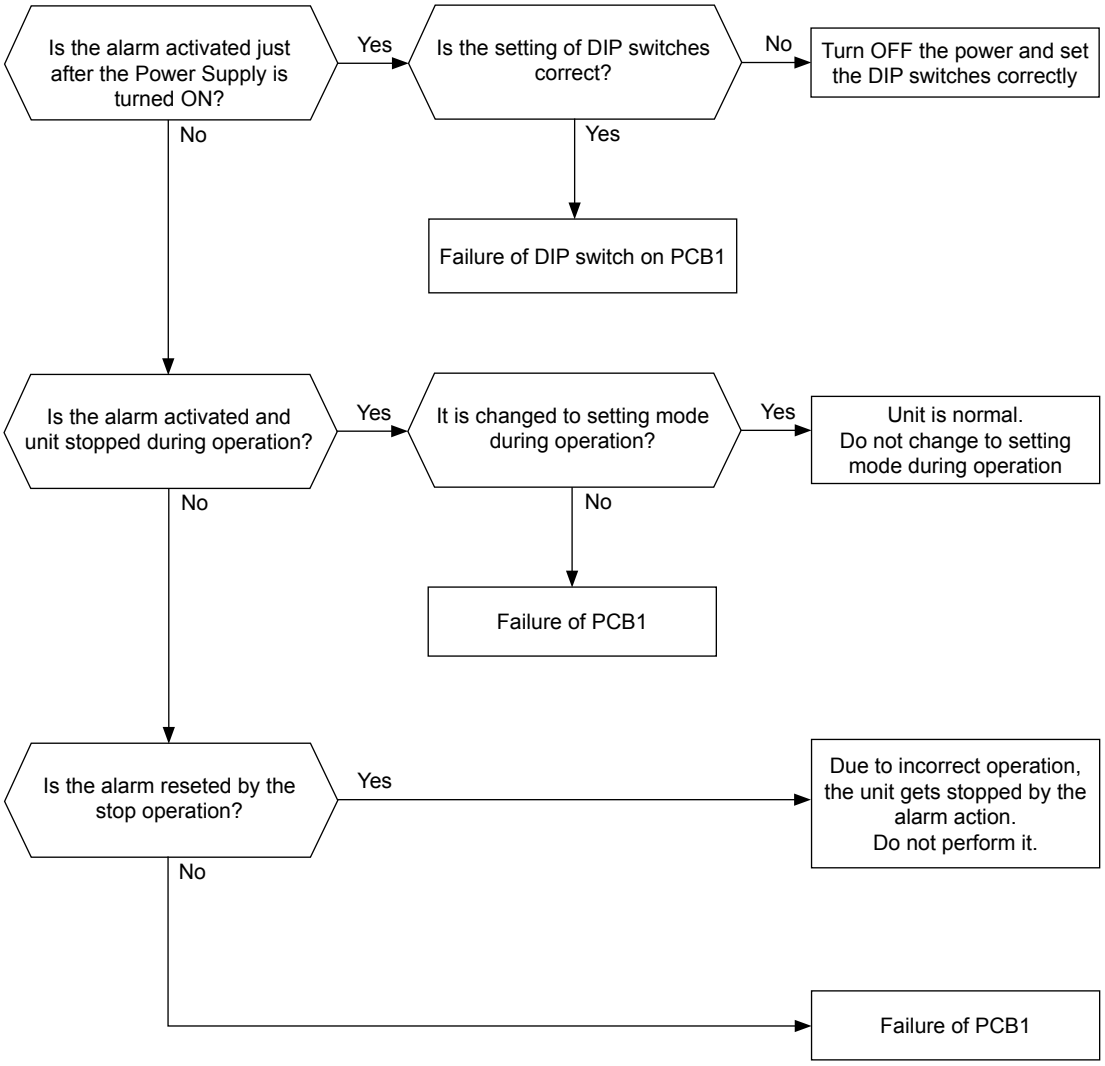






Все каталоги и инструкции здесь: https://splitsystema48.ru/instrukcii-po-ekspluatacii-kondicionerov.html

| Alarm code | Description |
|---|---|
| 51 | **Failure of the current sensor for "Inverter" (0 A detection)** |

- The alarm code is displayed on the PCB´s display
- The compressor stops and restarts automatically in 3 minutes.
- The alarm appears after 3 retries during 30 minutes.
  – This alarm code is displayed when the frequency of the compressor is maintained at 15~18 Hz after the compressor is started, one of the absolute values of the running current at each phase U+, U-, V+ and V- is less than 1.5A (including 1.5A).

**Retry code: P-17**

***WARNING***

- *Electrical hazard. Risk of electrical shock. Before checking and replacing the inverter parts perform the high voltage discharge procedure by referring to section "Checking procedure for main parts".*

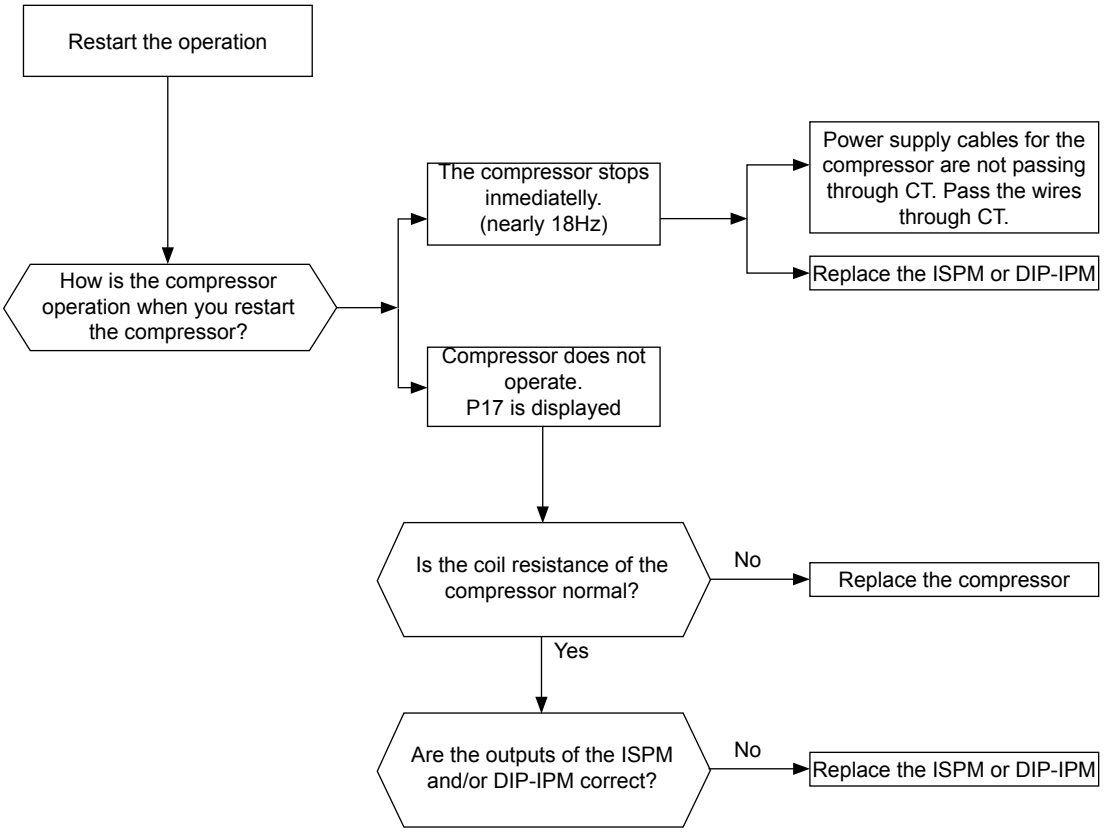




Все каталоги и инструкции здесь: https://splitsystema48.ru/instrukcii-po-ekspluatacii-kondicionerov.html

| Alarm code | Description |
|---|---|
| 52 | **Activation of protection for inverter instantaneous over current (1)** |

- The alarm code is displayed on the PCB´s display.
- The compressor stops and restarts automatically in 3 minutes.
- The alarm appears after 6 retries during 30 minutes.
  – This alarm code is displayed when the compressor current is higher than the set value. Totally 3 minutes during 10 minutes.

**Retry code: P-17**

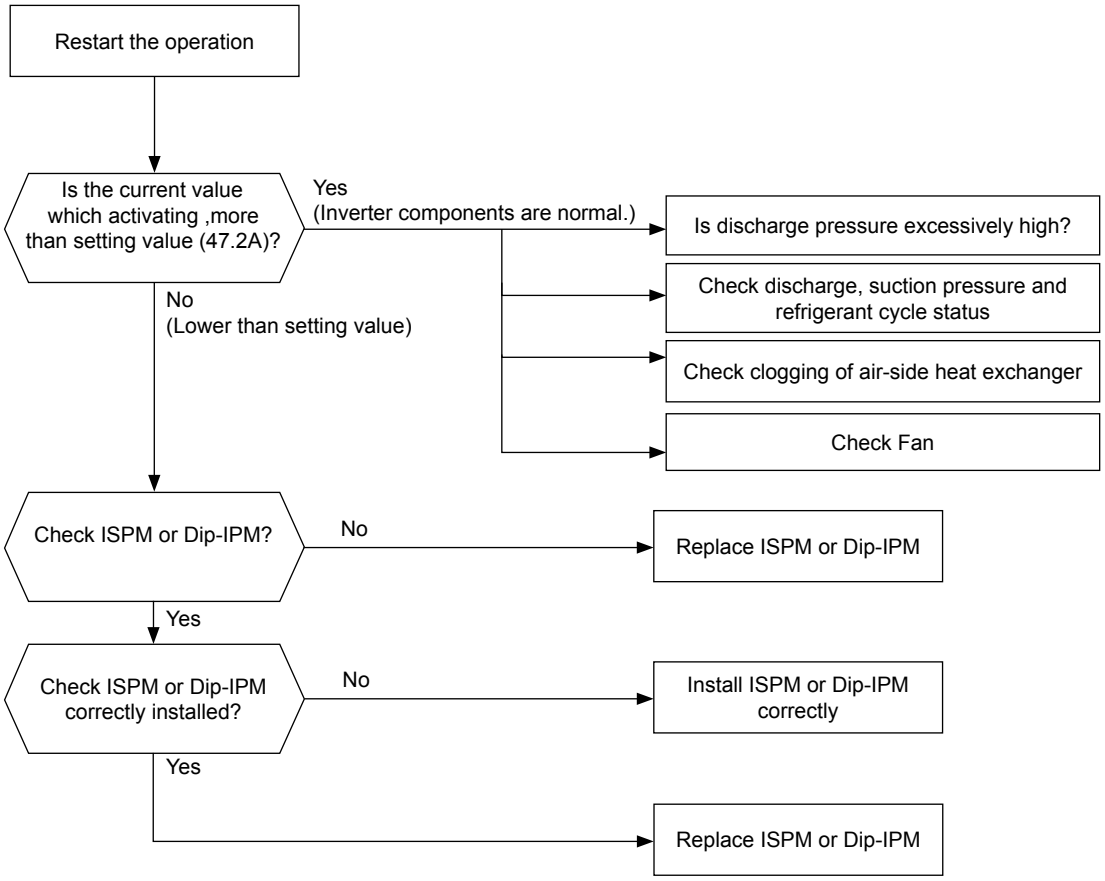


| | CAUTION |
|---|---|
| - | *Electrical hazard. Risk of electrical shock. Before checking and replacing the inverter parts perform the high voltage discharge procedure by referring to section "Checking procedure for main parts".* |





Все каталоги и инструкции здесь: https://splitsystema48.ru/instrukcii-po-ekspluatacii-kondicionerov.html

| Alarm code | Description |
|---|---|
| 52 | **Activation of protection for inverter instantaneous over current (2)** |

- The alarm code is displayed on the PCB´s display.
- The compressor stops and restarts automatically in 3 minutes.
- The alarm appears after 6 retries during 30 minutes.
  –This alarm code is displayed when the compressor current is higher than the set value.

**Retry code: P-17**

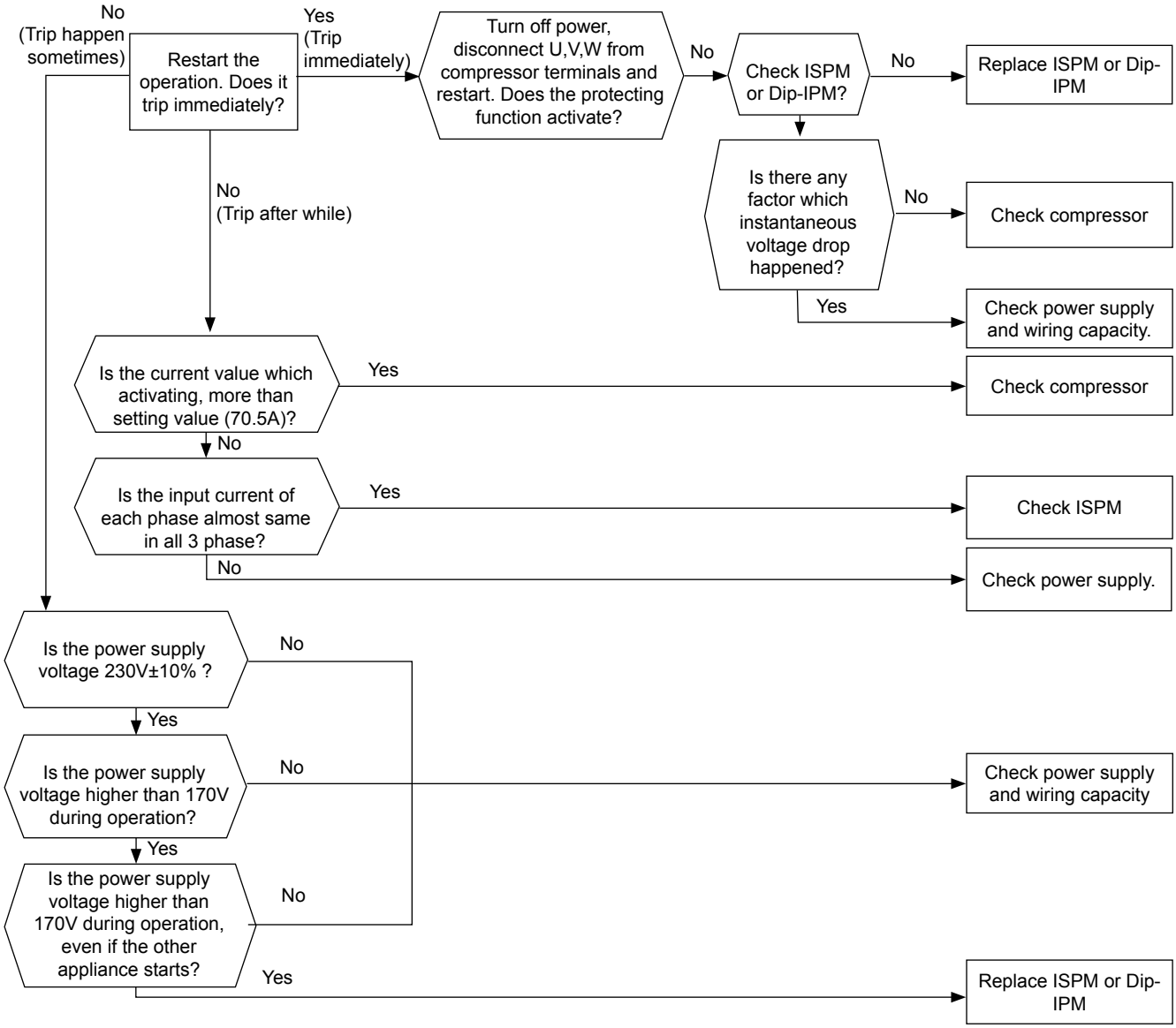


| | CAUTION |
|---|---|
| - | *Electrical hazard. Risk of electrical shock. Before checking and replacing the inverter parts perform the high voltage discharge procedure by referring to section "Checking procedure for main parts".* |



Все каталоги и инструкции здесь: https://splitsystema48.ru/instrukcii-po-ekspluatacii-kondicionerov.html

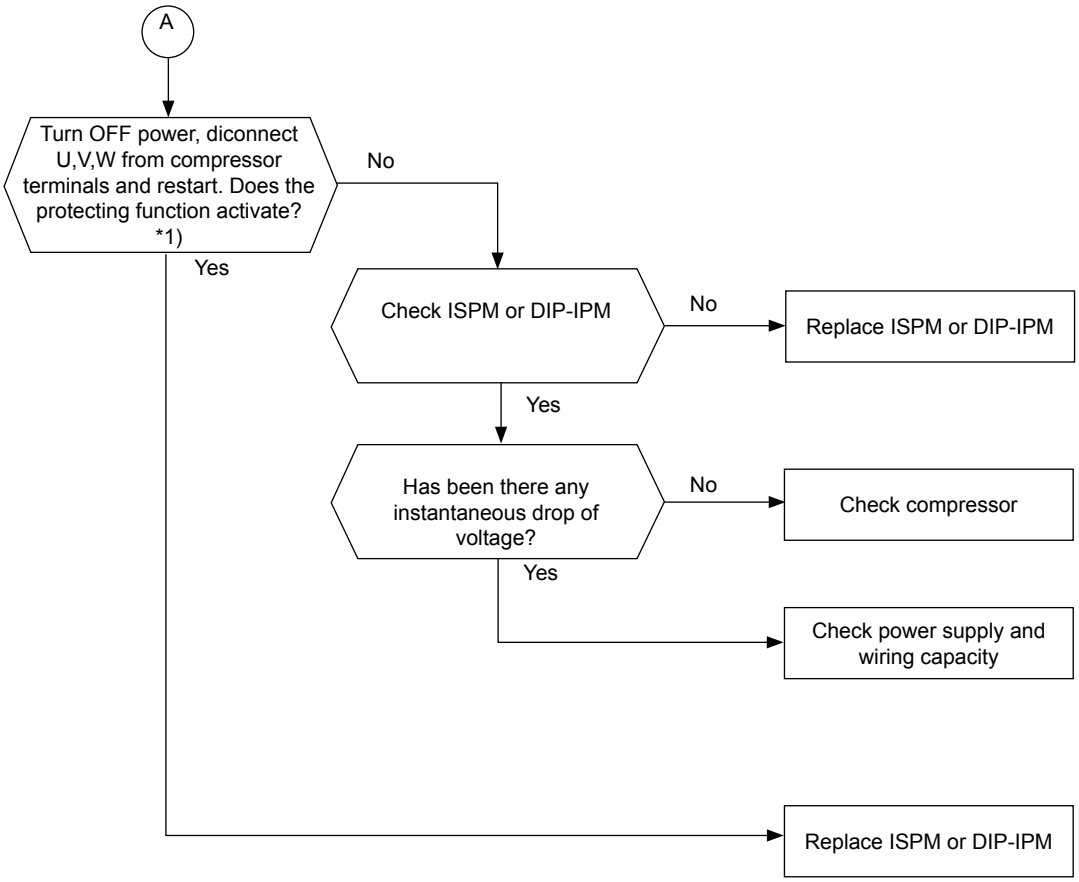


*1): Turn ON the No.1 switch of the DIP switch on ISPM when restarting with disconnecting the terminals of the compressor. After troubleshooting, turn OFF the No.1 switch of the DIP switch on ISPM.



Все каталоги и инструкции здесь: https://splitsystema48.ru/instrukcii-po-ekspluatacii-kondicionerov.html

| Alarm code | Description |
|---|---|
| 53 | **ISPM or DIP-IPM protection activation** |

– IPM or Dip IPM have detecting function of abnormality.
This alarm is indicated when the transistor module detect the abnormality 3 times in 30 minutes including 3. Retry operation is performed up to the occurrence of 2 times. (The compressor restarts automatically in 3 min.)

Conditions:
Abnormal current to the transistor module such as
Short circuited or grounded
or
Abnormal temperature of the IPM or Dip IPM
or
Control voltage decrease

**Retry code: P-17**

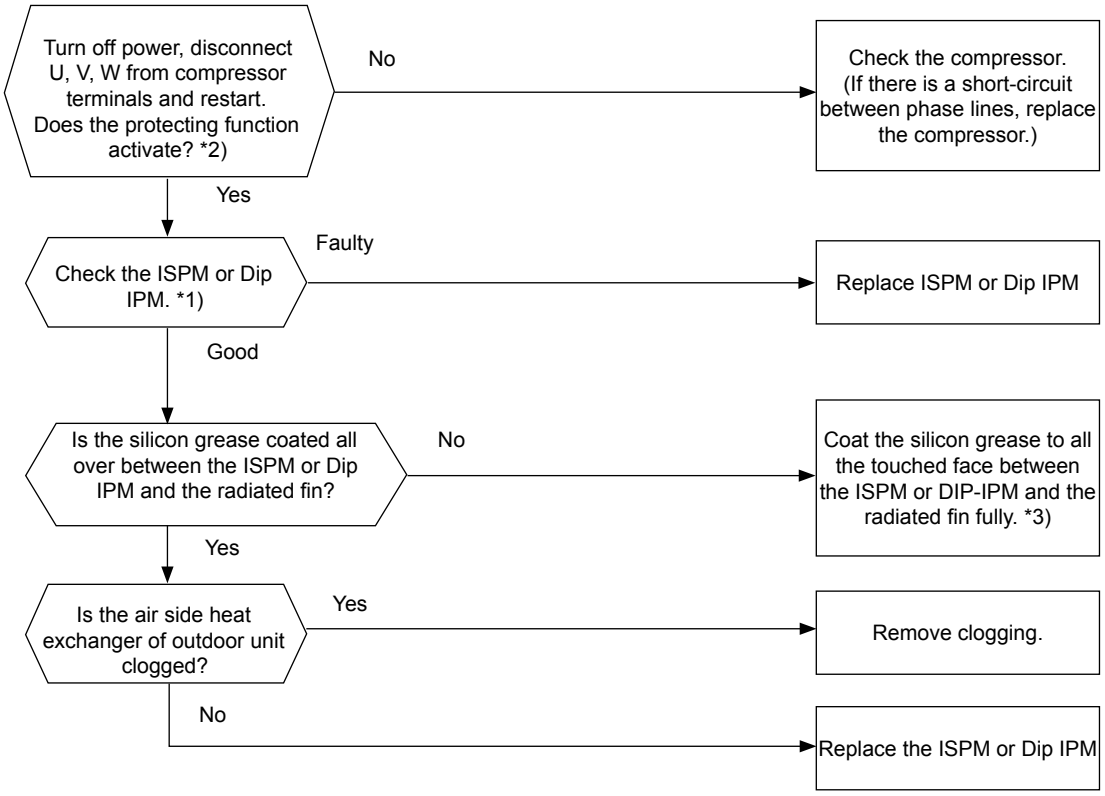


*1) Perform the high voltage discharge work by referring to the section "Checking procedure for main parts". before checking and replacing the inverter components.
*2) Turn ON the No.1 switch of the dip switch DSW1 on Inverter PCB when restarting with disconnecting the terminals of the compressor. After troubleshooting, turn OFF the No.1 switch of the dip switch DSW1 on Inverter PCB.
*3) Use the silicon grease provided as accessory (Service parts No. P22760).

| | ***NOTE*** |
|---|---|
| - | *When alarm code “53” is indicated, the fan motor (DC motor) ensure that DC fan motor is checked according to the section "Fault diagnosis of DC fan motor".* |



Все каталоги и инструкции здесь: https://splitsystema48.ru/instrukcii-po-ekspluatacii-kondicionerov.html

| Alarm code | Description |
|---|---|
| 54 | **Increase in the inverter fin temperature** |

- The compressor stops when the temperature of the thermistor for inverter fin excess 100ºC, and restarts automatically in 3 minuntes.
- The alarm appears after 3 retries during 30 minutes.

**Retry code: P-17**

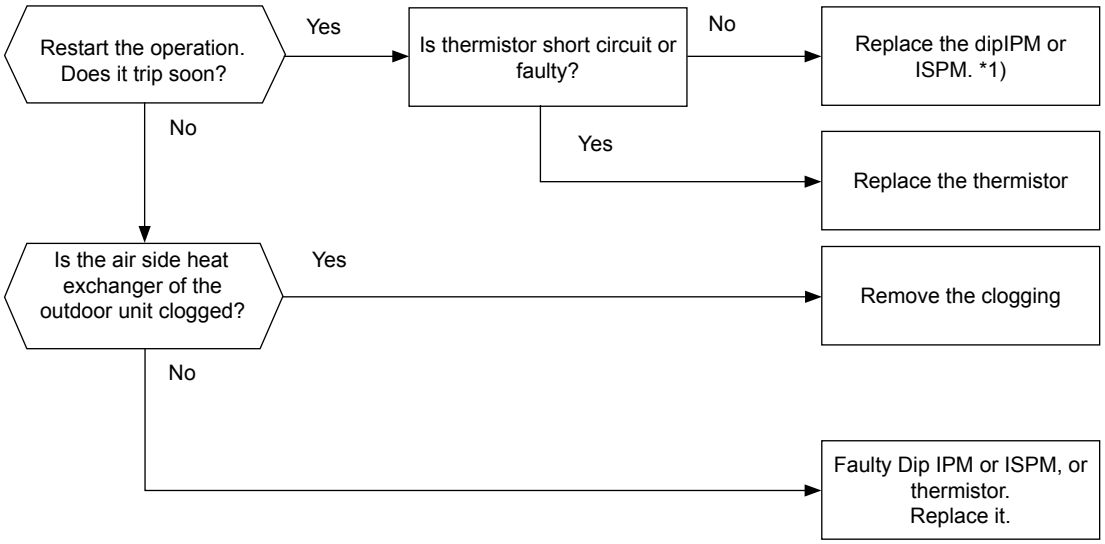


1*): Perform the high voltage discharge work by referring to the section "Checking procedure for main parts" before checking and replacing the inverter components.



Все каталоги и инструкции здесь: https://splitsystema48.ru/instrukcii-po-ekspluatacii-kondicionerov.html

| Alarm code | Description |
|---|---|
| 57 | **Abnormality of fan motor protector (DC fan motor)** |

- The fan motor is stopped once, and restarted after 10 seconds.
  This alarm code is displayed when the revolution pulse output detected from the fan motor is 10rpm or less. If it occurs more than 10 times in 30 minutes, this alarm is indicated.
  –This alarm code is displayed when the fan motor is stopped by an abnormal reason like fan motor lock.

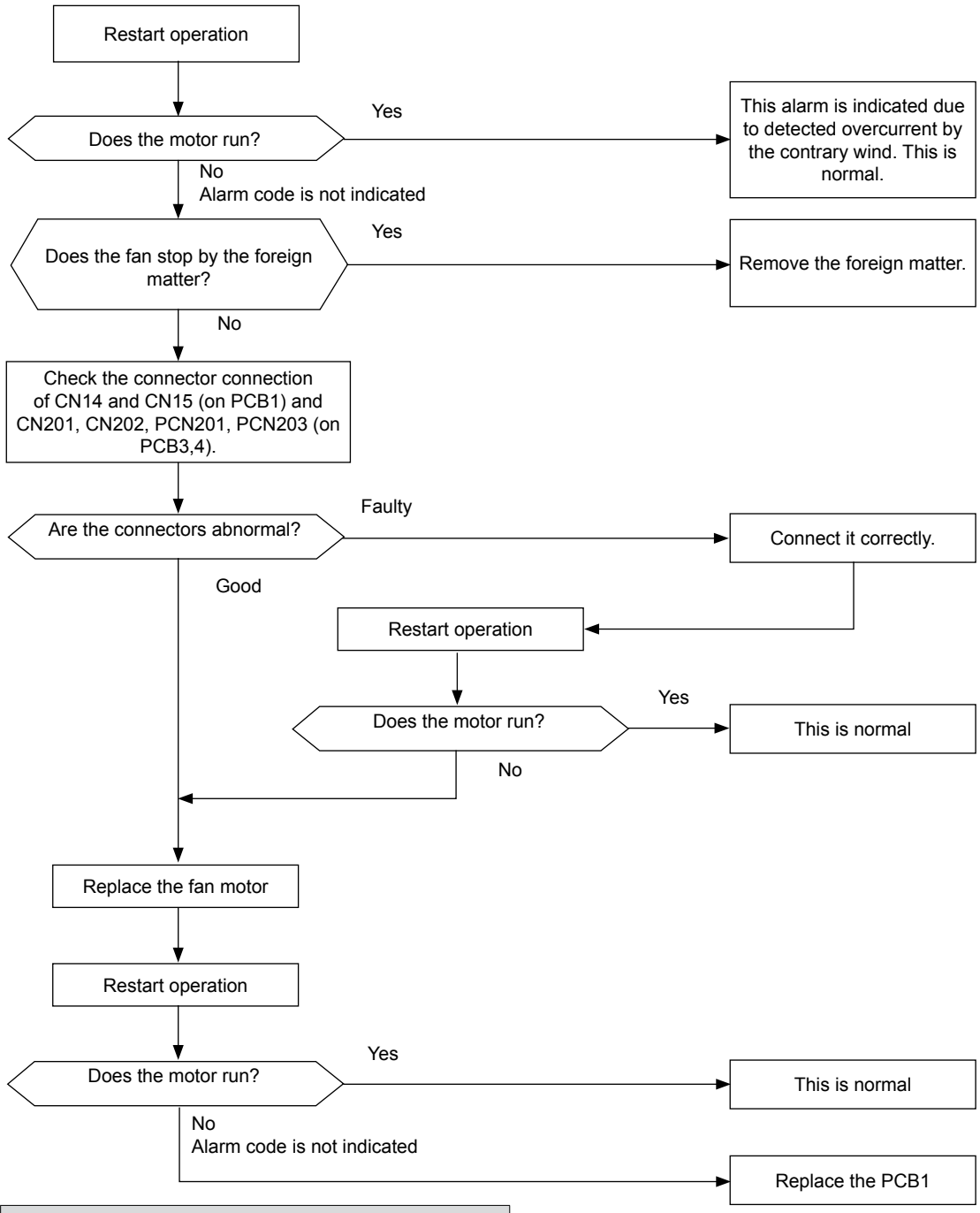


| NOTE |
|---|
| - *Check to ensure that DC Fan motor is checked according to the section "Fault diagnosis of DC fan motor".* |

In the case that the fan motor does not run even the PCB1 is replaced, replace fan inverter PCB (PCB4,5).



Все каталоги и инструкции здесь: https://splitsystema48.ru/instrukcii-po-ekspluatacii-kondicionerov.html

| Alarm code | Description |
|---|---|
| 5P | **No feed back signal from water pump** |

- The alarm code is displayed on the PCB´s display.
- It is available once feedback signal confirmed.
  – This alarm code is displayed when the Pump operation feedback signal (terminals 1-2) is OFF during pump interlock (CMp) ON (terminals 3-4).

**PCB monitoring position: PCB1, PCN4**

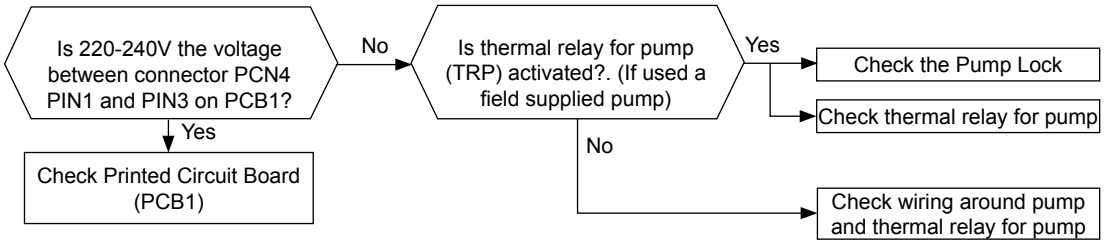




Все каталоги и инструкции здесь: https://splitsystema48.ru/instrukcii-po-ekspluatacii-kondicionerov.html

| Alarm code | Description |
|---|---|
| 6E | **Cooler water failure (this alarm is not available in this unit)** |

– This alarm code is displayed when the contact between #1 and #2 of CN6 is not closed.

**PCB monitoring position: PCB1, CN6**

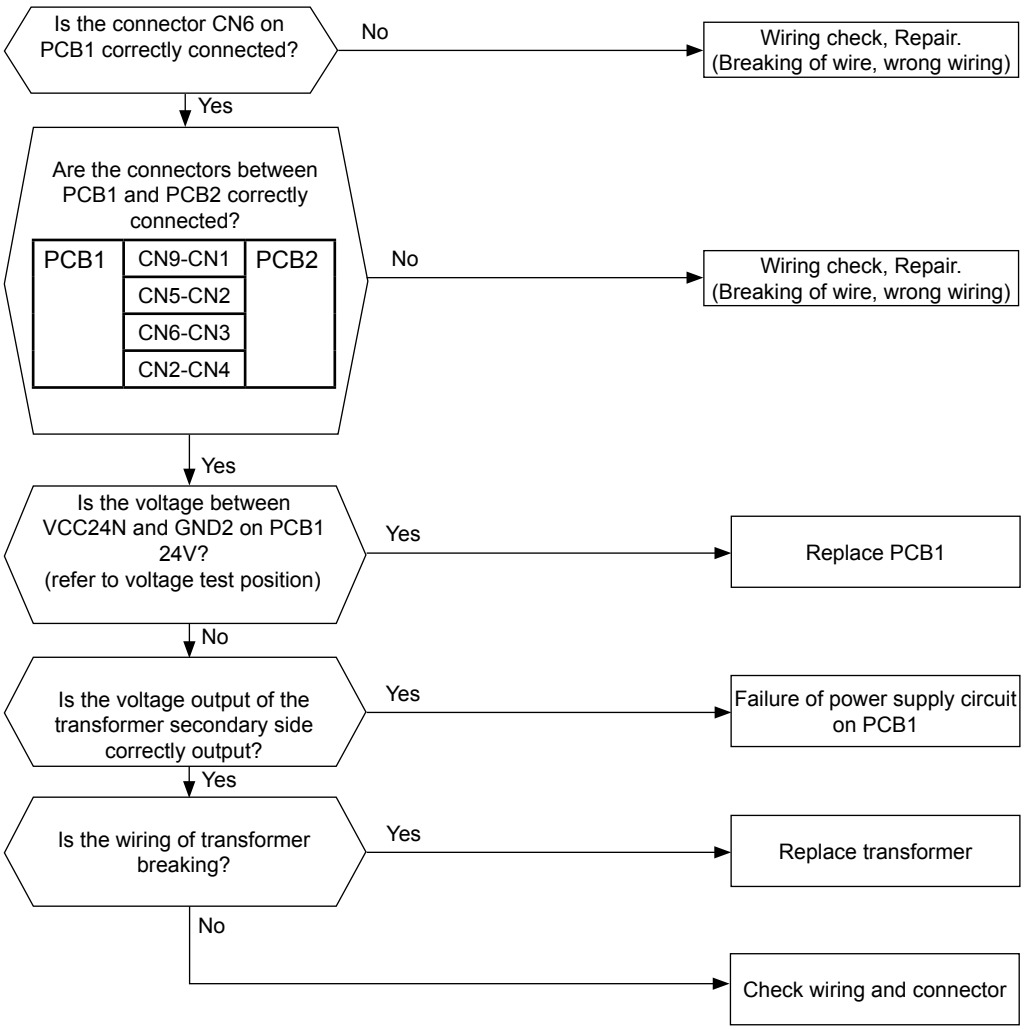




Все каталоги и инструкции здесь: https://splitsystema48.ru/instrukcii-po-ekspluatacii-kondicionerov.html

| Alarm code | Description |
|---|---|
| 6C | **Condenser water failure (this alarm is not available in this unit)** |

–This alarm code is displayed when the contact between #1 and #2 of CN7 is not closed.

**PCB monitoring position: PCB1, CN7**

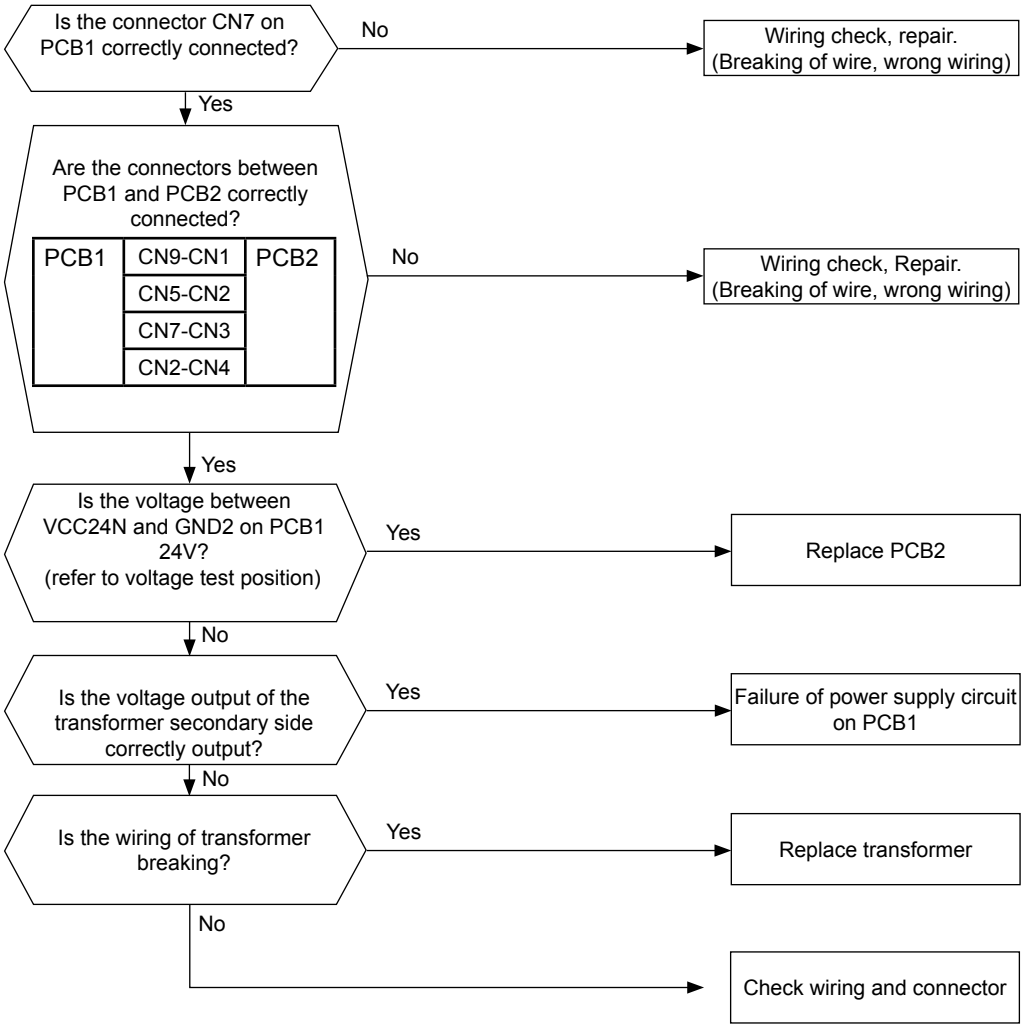




Все каталоги и инструкции здесь: https://splitsystema48.ru/instrukcii-po-ekspluatacii-kondicionerov.html

| Alarm code | Description |
|---|---|
| PU (flickering) | **Excessively high water temperature (compressor stop)** |

- Water temperature is increased to 65ºC by heat generation in pump or other heat source during only pump running (during compressor stop: during thermo off or during pump automatic operation in winter).
- If water temperature is decreased less than 6ºC due to pump stop, it becomes normal status automatically.
- Since this is not an abnormality of unit, it is not saved in alarm history.
  When this alarm happen, check the water system first. If any cause can not be detected, check the unit according to the following procedure.

PCB monitoring position: PCB2, CN3 and CN9

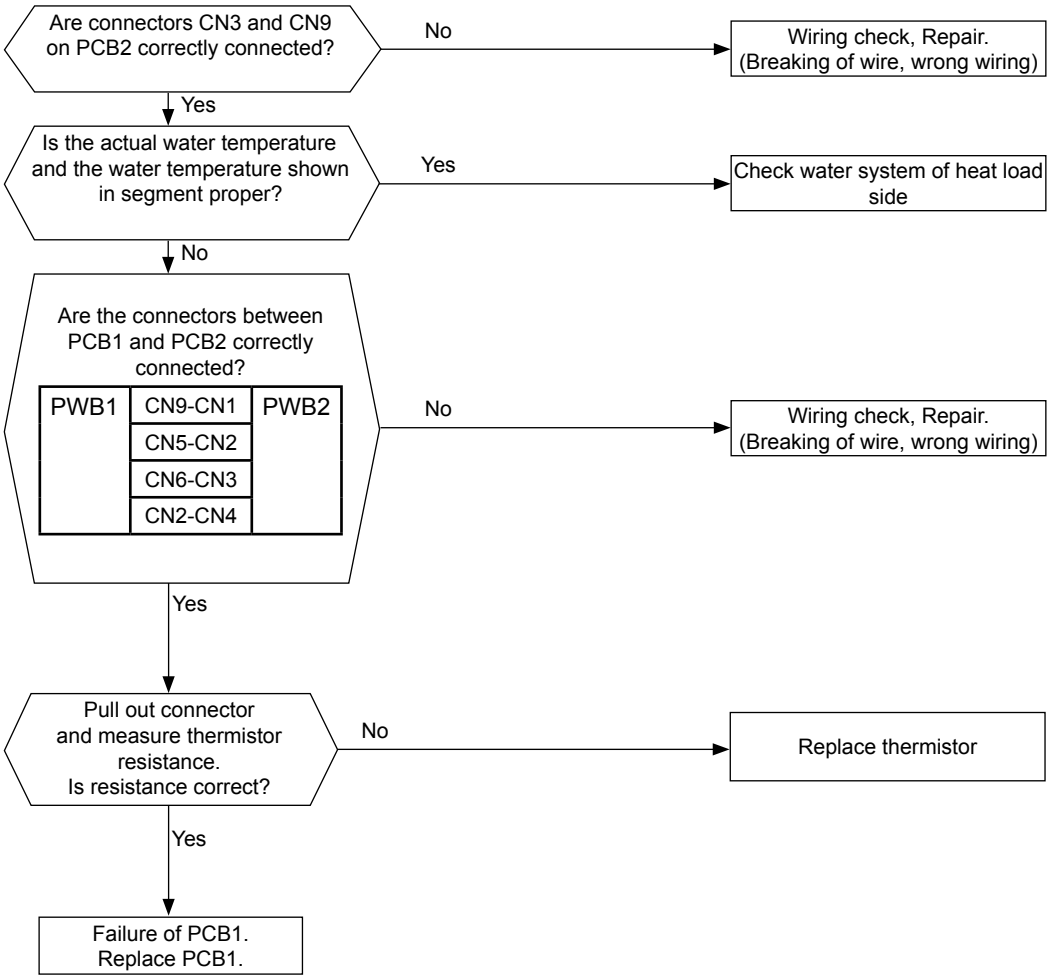


| | NOTE |
|---|---|
| - *Measure the resistance at least in 2 different points which is different more than 10 ºC.* | |



Все каталоги и инструкции здесь: https://splitsystema48.ru/instrukcii-po-ekspluatacii-kondicionerov.html

| Alarm code | Description |
|---|---|
| FA,Fb | **Failure of fan motor** |

- This alarm is indicated when the revolution pulse output from the fan motor is the reverse revolution signal is detected. The fan motor is stopped once, and restarted after 10 seconds. If it occurs more than 10 times in 30 minutes, this alarm is indicated.

| Alarm code | Fan Motor |
|---|---|
| FA | MF1 |
| Fb | MF2 |

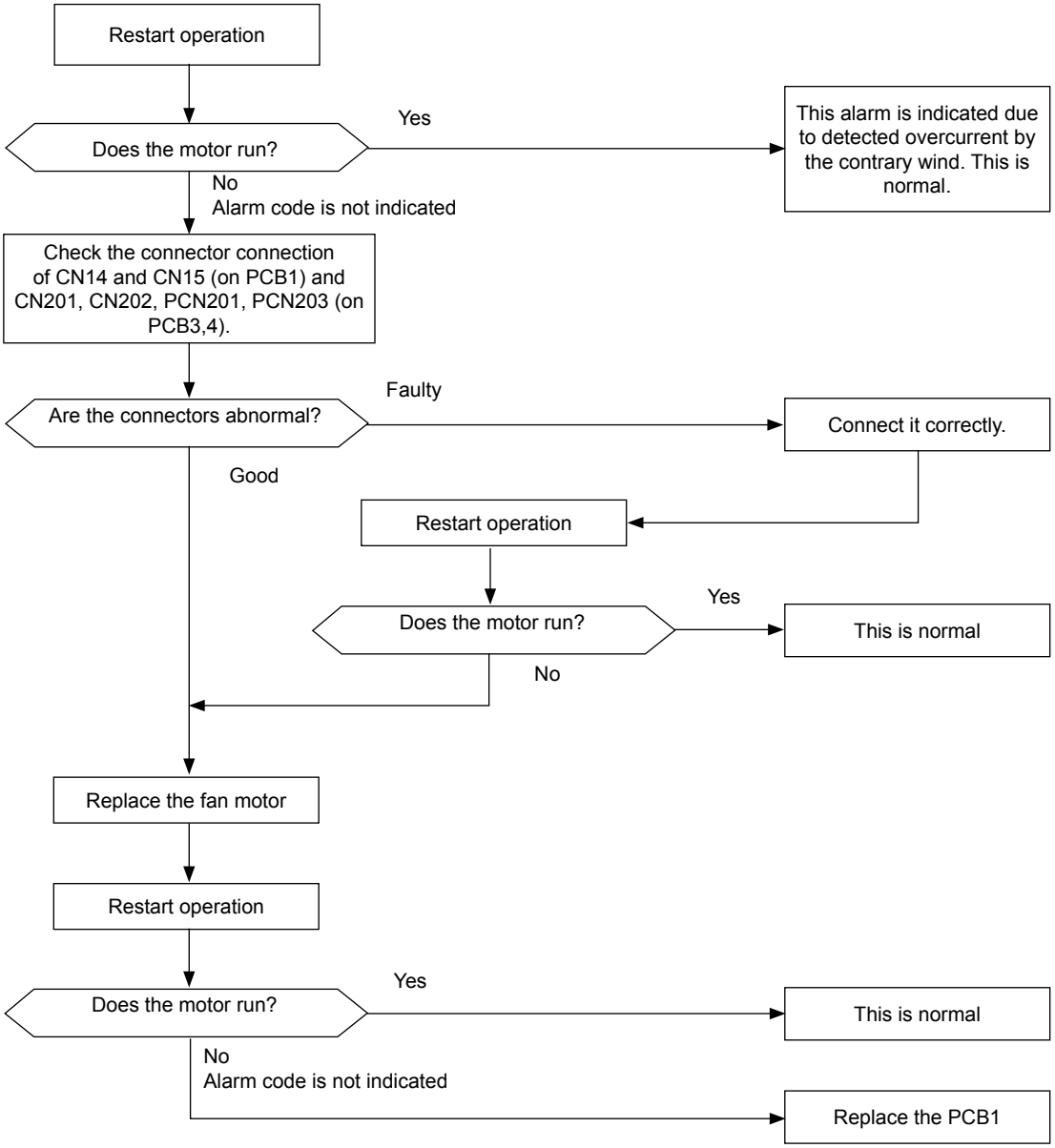


| NOTE |
|---|
| - *Check to ensure that DC Fan Motor is checked according to the section "Fault diagnosis of DC fan motor".* |

In the case that the fan motor does not run even the PCB1 is replaced, replace fan inverter PCB (PCB4,5).



Все каталоги и инструкции здесь: https://splitsystema48.ru/instrukcii-po-ekspluatacii-kondicionerov.html

# 7.3. FAILURE DIAGNOSIS METHOD

- **General check of failure diagnosis.**

In the case of no segment indication, unit can not operate.

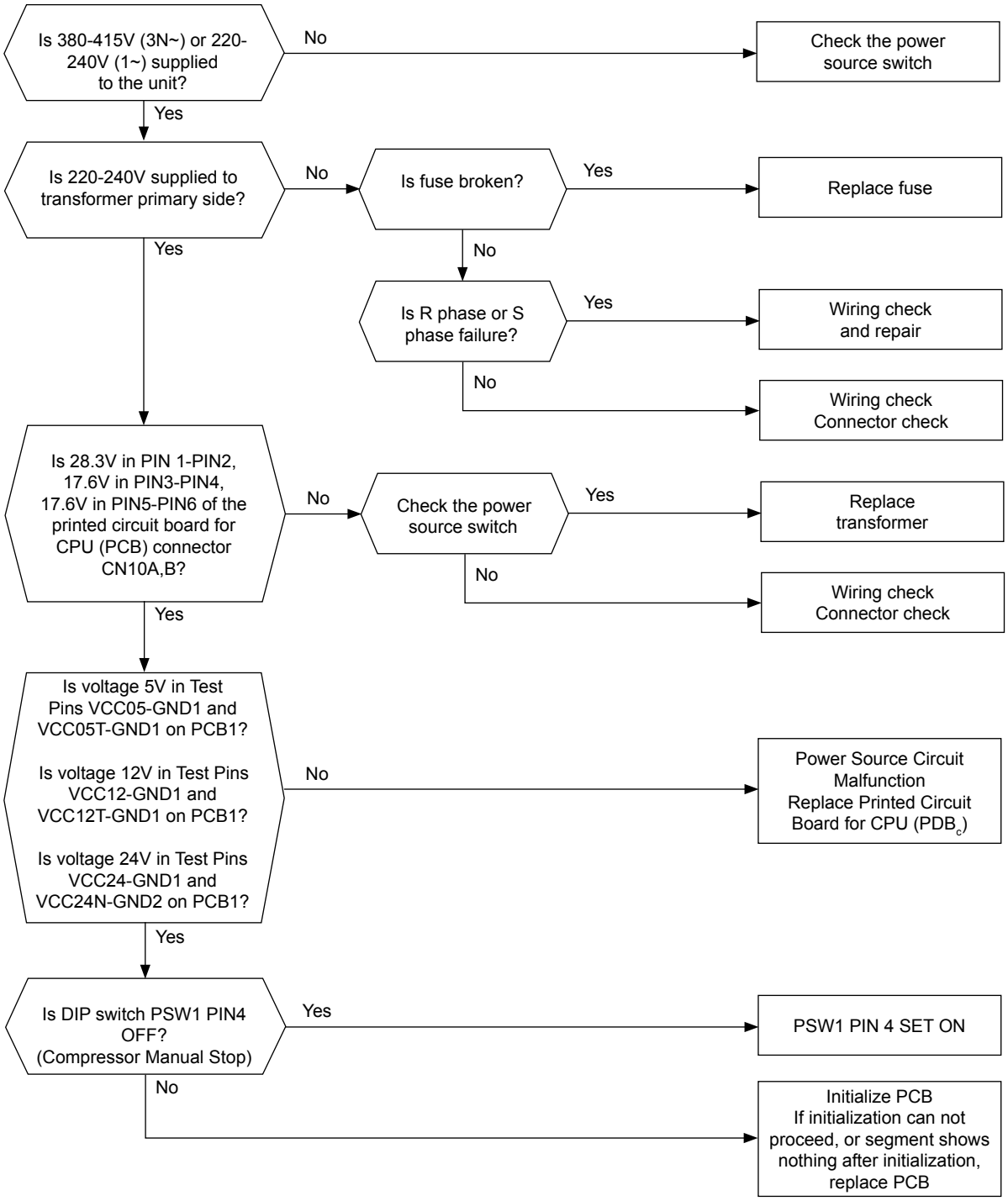




Все каталоги и инструкции здесь: https://splitsystema48.ru/instrukcii-po-ekspluatacii-kondicionerov.html

**Voltage test position:**

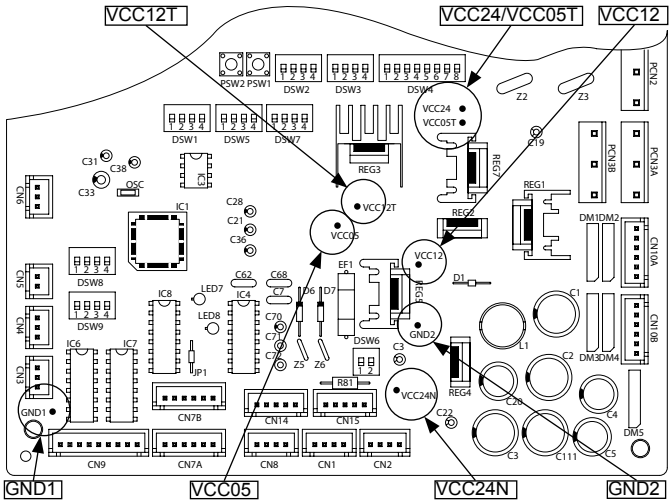


**Inicialization procedure**
Power Supply OFF, and set DSW1-1, DSW5-2,3 ON, and DSW 5-1,4 OFF on PCB
(Record original DIP switch setting)

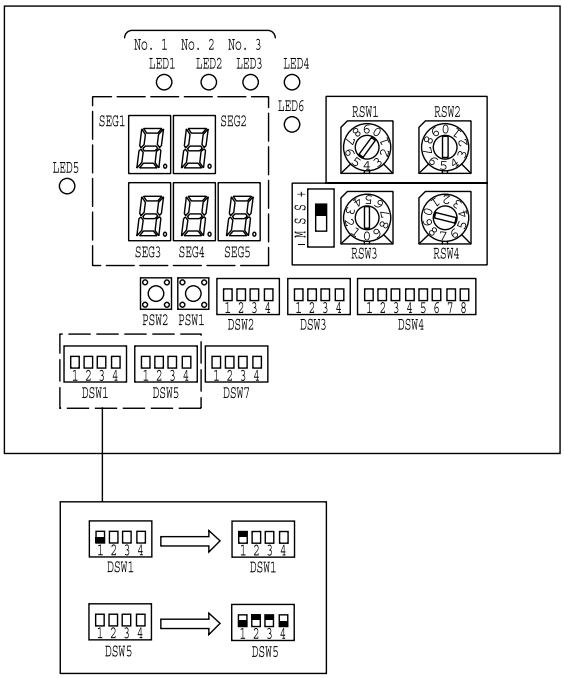


Power Supply ON, and confirm segment shows as follows:

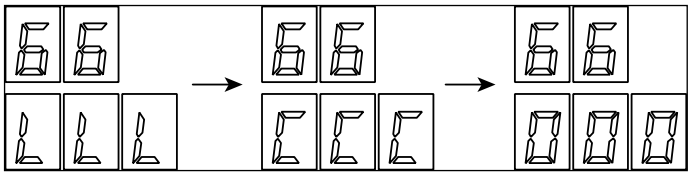

<Initialization successfully done>

If segment shows as follows, Power Supply OFF once, and Power ON again:

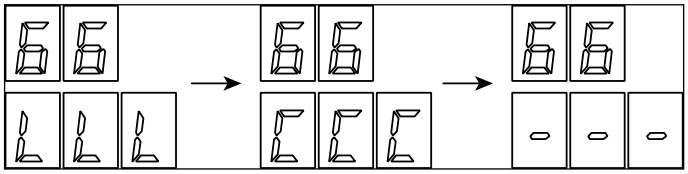

<Initialization failure>

If segment shows as "Initialization Successfully Done", Initialization Succeed. Power Supply OFF, and DSW1-1, DSW5-2,3 set original setting again. Initialization is finished. In other case, if segment shows nothing even if doing Initialization procedure, or shown Initialization Failure, PCB1 is broken and replace PCB1.



Все каталоги и инструкции здесь: https://splitsystema48.ru/instrukcii-po-ekspluatacii-kondicionerov.html

# 7.4. CHECKING PROCEDURE FOR MAIN PARTS

## 7.4.1. RHUE-(3~6)AVHN. Procedure for checking the DIP-IPM.

High voltage discharge is an imperative work for replacing parts.

| | WARNING |
|---|---|
| - | *Electrical hazard. Risk of electrical shock. Perform this high voltage discharge work to avoid an electric shock.* |

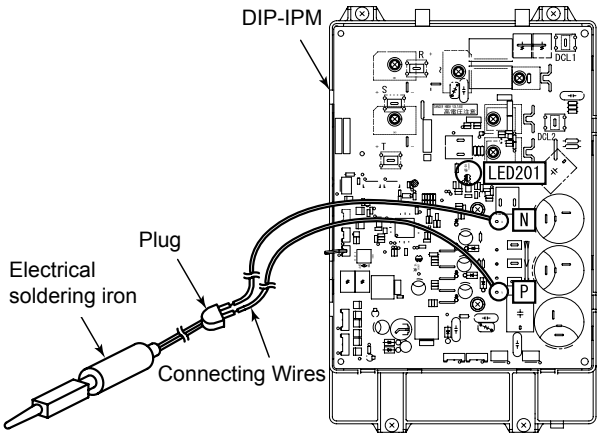


1. Turn OFF the main switches and wait for three minutes. Make sure that no high voltage exists. If LED201 is ON after start-up and LED201 is OFF after turning OFF power source, the voltage will decrease lower than DC50V.

2. Connect connecting wires to an electrical soldering iron

3. Connect the wires to terminals, P and N on DIP-IPM.
   => Discharging is started, resulting in hot soldering iron. Pay attention not to short-circuit between terminal P(+) and N(-)

4. Wait for 2 or 3 minutes and measure the voltage once again. Check to ensure that no voltage is charged.

- **Inverter module checking procedure**

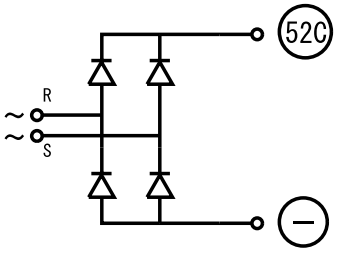


Internal circuit of rectified part of DIP-IPM
Non-faulty if [1] – [8] are checked and satisfied. (Measure with 1 kΩ range of a tester.)

| | NOTE |
|---|---|
| - | *DO NOT use a digital tester.* |

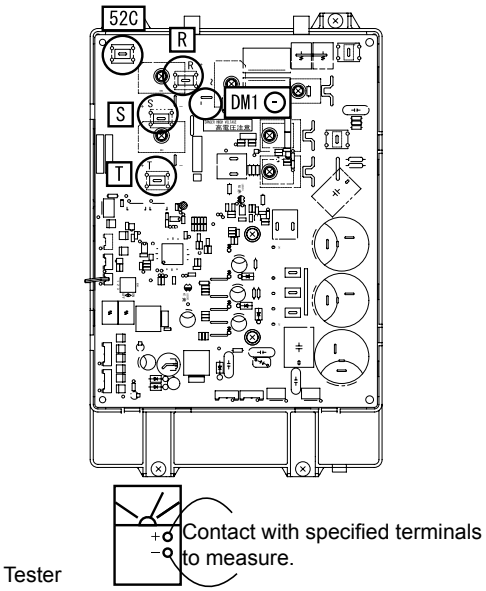


1. Touch [+] of the tester to DIP-IPM 52C terminal, and [-] to DIP-IPM R, S terminals to measure the resistance. Normal if all three terminals have 1 kΩ or greater.

2. Contrary to [1], touch [-] of the tester to DIP-IPM 52C terminal, and [+] to DIP-IPM R, S terminals to measure the resistance.
   Normal if all three terminals have 100 kΩ or greater.

3. Touch [-] of the tester to [-] of DIP-IPM DMI (soldered part), and [+] of the tester to DIP-IPM R, S terminals to measure the resistance.
   Normal if all three terminals have 1 kΩ or greater

4. Contrary to [3], touch [+] of the tester to [-] of DIP-IPM DMI, and [-] of the tester to DIP-IPM R, S terminals to measure the resistance. Normal if all three terminals have 100 kΩ or greater.



Все каталоги и инструкции здесь: https://splitsystema48.ru/instrukcii-po-ekspluatacii-kondicionerov.html

5. Touch [+] of the tester to [P] of DIP-IPM (soldered part), and [-] to DIP-IPM U, V, W terminals to measure the resistance.
   Normal if all three terminals have 1 kΩ or greater.

6. Contrary to [5], touch [-] of the tester to [P] of DIP-IPM (soldered part), and [+] to DIP-IPM U, V, W terminals to measure the resistance.
   Normal if all three terminals have 30 kΩ or greater.
   (Resistance gradually increases during measurement.)

7. Touch [-] of the tester to [N] of ISPM (soldered part), and [+] to ISPM U, V, W terminals to measure the resistance.
   Normal if all three terminals have 1 kΩ or greater.

8. Contrary to [7], touch [+] of the tester to [N] ofDIP-IPM (soldered part), and [-] to DIP-IPM U, V, W terminals to measure the resistance.
   Normal if all three terminals have 30 kΩ or greater.
   (Resistance gradually increases during measurement.)

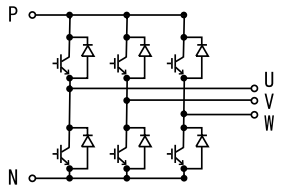


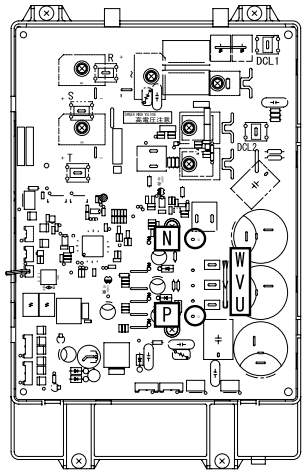


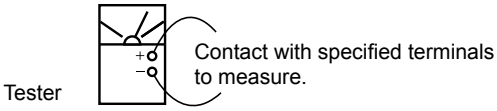


Internal circuit of ACT part of inverter module

Non-faulty if [9] – [13] are checked and satisfied.

(Measure with 1 kΩ range of a tester.)

| | NOTE |
|---|---|
| - | *DO NOT use a digital tester* |

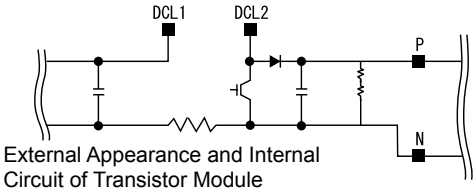


External Appearance and Internal Circuit of Transistor Module

9. Check items [1] – [8].

10. Touch [+] of the tester to DIP-IPM DCL2 terminal, and [-] to [P] of ISPM/DIP-IPM (soldered part) to measure the resistance.
    Normal if all three terminals have 100 kΩ or greater

11. Contrary to [10], touch [-] of the tester to DIP-IPM DCL2 terminal, and [+] to [P] of DIP-IPM (soldered part) to measure the resistance.
    Normal if all three terminals have 1 kΩ or greater.

12. Touch [+] of the tester to DIP-IPM DCL2 terminal, and [-] to [N] of DIP-IPM (soldered part) to measure the resistance.
    Normal if all three terminals have 100 kΩ or greater.

13. Contrary to [12], touch [-] of the tester to DIP-IPM DCL2 terminal, and [+] to [N] of DIP-IPM (soldered part) to measure the resistance.
    Normal if all three terminals have 10 kΩ or greater.
    (Resistance gradually increases during measurement.)

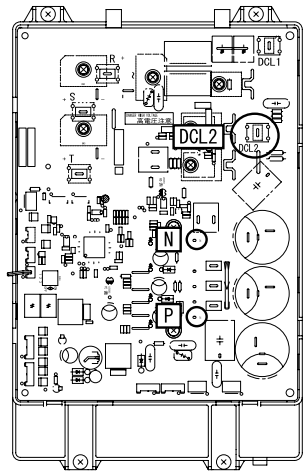


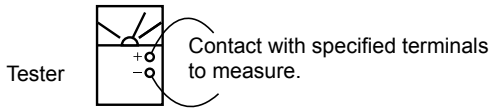




Все каталоги и инструкции здесь: https://splitsystema48.ru/instrukcii-po-ekspluatacii-kondicionerov.html

## 7.4.2. RHUE-(5/6)AHN. Procedure for checking the ISPM.

Remove all the terminals of the ISPM before check. If items (a) to (h) are performed and the results are satisfactory, ISPM is normal. Measure it under 1 kΩ range of a tester.

| | WARNING |
|---|---|
| - | *Electrical hazard. Risk of electrical shock. Perform the high voltage discharge procedure as described.* |

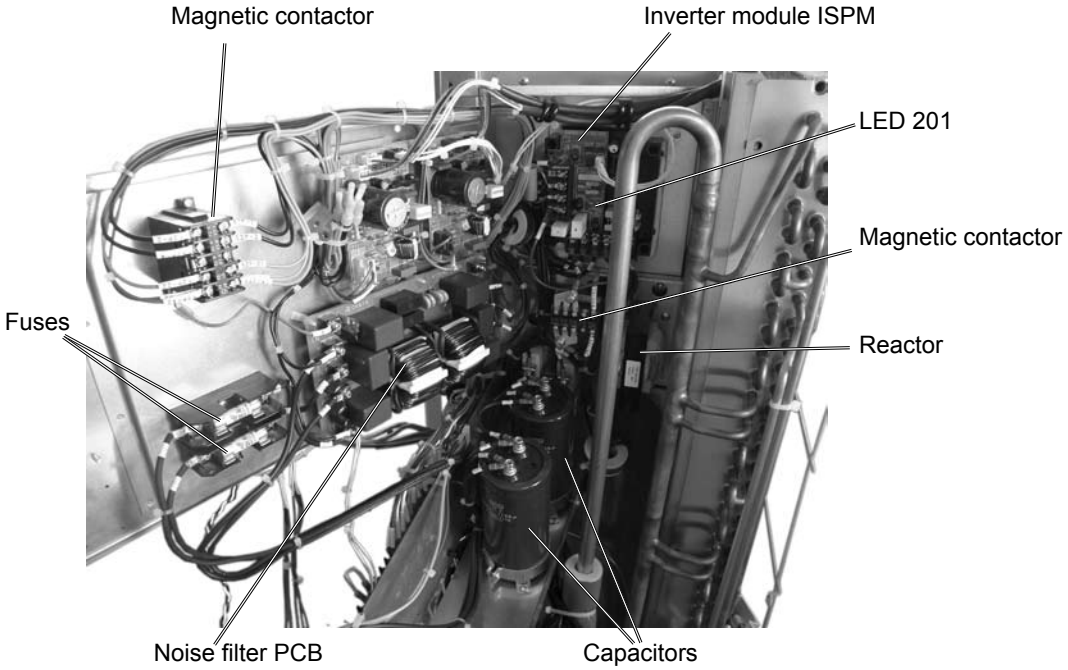


- Procedure using an analog tester:

Checking the diode module:

1. By touching the + side of the tester to the P1 terminal of ISPM and the - side of the tester to R and S of ISPM, measure the resistance. If all the resistances are more than 1 kΩ, it is normal.
2. By touching the - side of the tester to the P1 terminal of ISPM and the + side of the tester to R and S of ISPM, measure the resistance. If all the resistances are more than 100 kΩ, it is normal.
3. By touching the - side of the tester to the N terminal of ISPM and the + side of the tester to R and S of ISPM, measure the resistance. If all the resistances are more than 1 kΩ, it is normal.
4. By touching the + side of the tester to the N terminal of ISPM and the - side of the tester to R and S of ISPM, measure the resistance. If all the resistances are more than 100 kΩ, it is normal.

Rectification parts of internal circuit of ISPM (common)

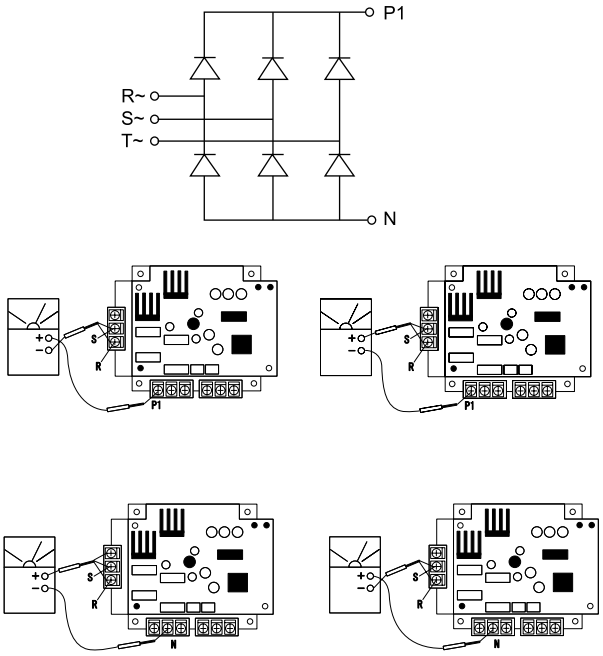




Все каталоги и инструкции здесь: https://splitsystema48.ru/instrukcii-po-ekspluatacii-kondicionerov.html

Checking the transistor module:

1. By touching the + side of the tester to the P terminal of ISPM and the - side of the tester to U, V and W of ISPM, measure the resistance. If all the resistances are more than 1 kΩ, it is normal.
2. By touching the - side of the tester to the P terminal of ISPM and the + side of the tester to U, V and W of ISPM, measure the resistance. If all the resistances are more than 100 kΩ, it is normal.
3. By touching the - side of the tester to the N terminal of ISPM and the + side of the tester to U, V and W of ISPM, measure the resistance. If all the resistances are more than 100 kΩ, it is normal.
4. By touching the + side of the tester to the N terminal of ISPM and the - side of the tester to U, V and W of ISPM, measure the resistance. If all the resistances are more than 1 kΩ, it is normal.

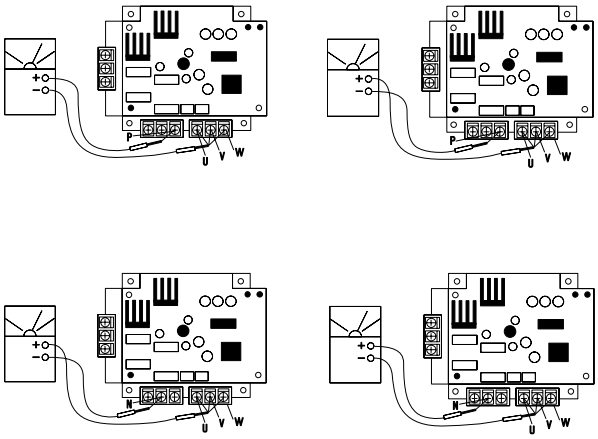


- Procedure using a digital tester:

| | NOTE |
|---|---|
| - | *The digital tester must be able to check semiconductors and continuity.* |

Based on the folowing scheme of ISPM with the contactor, the reactor, capacitors and the resistance, follow the next procedures.

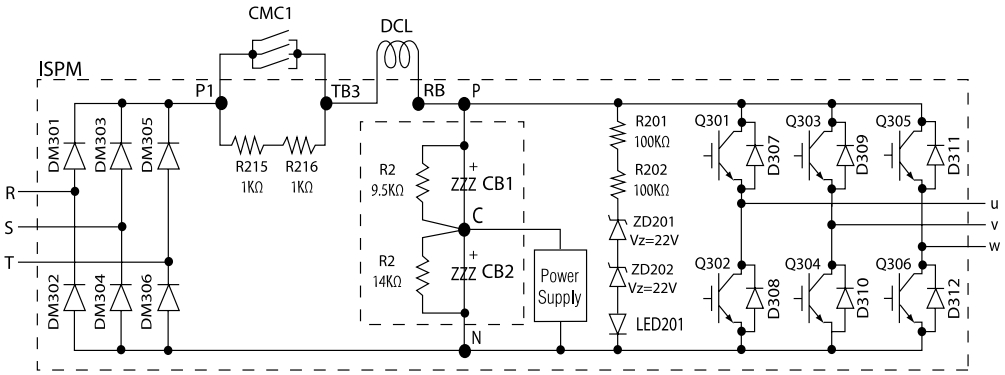


- **Checking the diode module**

1. By placing a jumper from +P1 to -RST or -N to +RST, no continuity and no variation on voltage drop should appear.

2. By placing a jumper from P1 to +RST or +N to RST: continuity and variation on voltage drop (nearly 0,365) should be displayed, and the same value in all cases. Not the same value means that the diode module is damaged.



Все каталоги и инструкции здесь: https://splitsystema48.ru/instrukcii-po-ekspluatacii-kondicionerov.html

- **Checking the transistor module**

1. By bonding +P to -UVW or -N to +UVW, no continuity and no variation on voltage drop should appear.

2. By bonding -P to +UVW or +N to -UVW: continuity and variation on voltage drop (nearly 0,405) should be displayed, and the same value in all cases. Not the same value means that the diode module is damaged.

## 7.4.3. Checking capacitors CB1 & CB2.

| | ***DANGER*** |
|---|---|
| | - *Electrical hazard. Risk of serious injuries or death.*<br>  - *Before installing the electrical wiring or before performing a periodical check, turn OFF the main switch of the unit. For safety reasons, be sure that the fan is stopped.*<br>  - *Prevent from touching the capacitors' terminals. High voltage should be present before discharging them.*<br>  - *Turn off the unit and wait for the LED 201 to be off before touching the components.* |

If it's possible, check the capacitance of each capacitor : 4700µF ± 20% (between 3760µF to 5640µF).

A visual check of the pressure valve of capacitors must be done to ensure it's integrity:

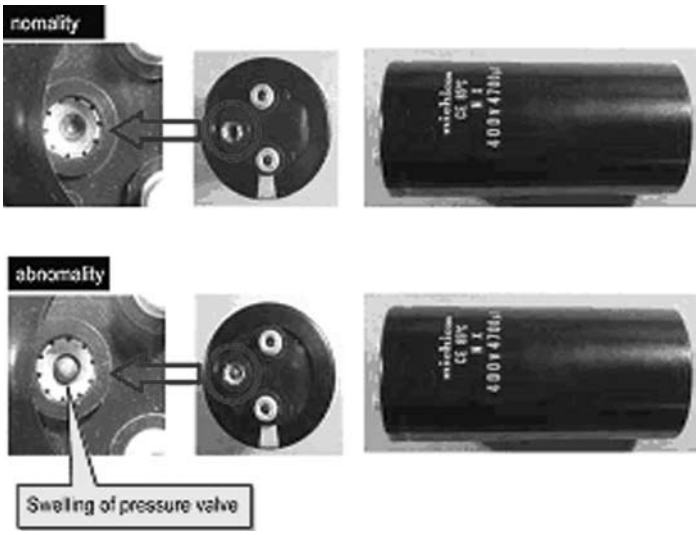


It is not recommended to check tension.

PN = Power source x √2, PC=CN is nearly equal to PN/2.

R1 & R2:

1) If the value is different:

- Capacitor could be damaged by overload.

- 04 alarm could be displayed if low supply voltage (CN) for ISPM control part is present.

2) R1 = 9.5Ω & R2 = 14.0Ω. If these values are different, the capacitors will be not properly charged.

Resistance between P1 & TB3 = 2kΩ (white resistance in the ISPM).



Все каталоги и инструкции здесь: https://splitsystema48.ru/instrukcii-po-ekspluatacii-kondicionerov.html

In case that Mg. SW 52C (CMC1) is not ON, the compressor current will travel through these resistances, and they will be broken. Mg. SW 52C (CMC1) should be checked. Check the resistance between the primary and secondary terminal where the contact point is melted for Mg. SW 42C. If there is continuity, the contact is melted and 52C is broken (NG).

Reactor resistance can be messured between TB3 and RB = 0,2Ω. Checking this component is not necessary.

| | NOTE |
|---|---|
| - *Noise filter does not affect ISPM directly, so is not necessary to check it when ISPM fails.*<br>- *Both digital or analog testers are valid to check the values.* | |

## 7.4.4. Fault diagnosis of DC fan motor.

About DC fan motor fault diagnosis:

When ISPM/DIP-IPM is faulty and Alarm 53 appears, the fan motor may also be damaged. To prevent ISPM/DIP-IPM damage which may result from operation combined with a faulty fan motor, check also if the fan motor is not damaged when ISPM/DIP-IPM is replaced

| | NOTE |
|---|---|
| - *Turn OFF main power before start working.*<br>- *Working and checking with the power ON may disturb correct diagnosis and may result in failure.* | |

DC motor(s) included in different models:

| Model | Pieces |
|---|---|
| RHUE-3AVHN | 2 |
| RHUE-4AVHN | 2 |
| RHUE-5AVHN | 2 |
| RHUE-5AHN | 2 |
| RHUE-6AVHN | 2 |
| RHUE-6AHN | 2 |

- **Fault diagnosis procedure**

7

1. Remove fan motor connectors from the control PCB ISPM or DIP-IPM and turn the fan motor shaft by hand.

| Normal | Fan motor shaft turns smoothly |
|---|---|
| Faulty: | No continuous rotary torque movement felt when turning the motor by hand. This occurs because the internal magnet of the fan motor breaks the movement when the internal electronic circuit of the fan motor has a short-circuit fault |

2. Measure the fan motor resistance using a tester.



Все каталоги и инструкции здесь: https://splitsystema48.ru/instrukcii-po-ekspluatacii-kondicionerov.html

| Measurement procedure | |
|---|---|
| 1. | Remove the fan motor connector from the control PCB, ISPM or DIP-IPM. |
| 2. | Connect the black test lead of the tester to the black wire pin of the fan motor connector |
| 3. | Connect the red test lead to the wire connector pin to be checked |
| Results | |
| Normal: | Observed values will be close to the normal values in the table below |
| Faulty: | Observed values will be deviated from the normal values in the table below.<br>Generaly an open-circuit fault shows ∞, and a short-circuit fault shows several Ω-kΩ.) |

Internal electronic circuit fault of the fan motor including short-circuit and breakage can be checked.

| Model | Motor model | Wire color for checking (Normal value) Ω | | | |
|---|---|---|---|---|---|
| | | Red-black | White-black | Yellow-black | Blue-black |
| RHUE-(3~6)A(V)HN | SIC-68FV-D851-7.8 | 1 MΩ or greater | 42-78 KΩ | 168-312 KΩ | 1 MΩ or greater |

**(*) Values are shown for referenctial purpose. While actual values may vary depending on the type of the tester; any tester can be used to determine any short-circuit or breakage based on ∞ or several Ω/several kΩ or 0Ω.**

- **Other parts**

| Part name | Unit models | Model code | Resistance (Ω) |
|---|---|---|---|
| Solenoid valve for gas bypass | | 105-52-52 (50Hz) | 1540.00 at 20 ºC |
| Solenoid valve for liquid injection | | 105-52-52 (50Hz) | 1540.00 at 20ºC |
| Reversing valve | | STF-01AJ502D1 (50Hz) | 1435.00 at 20ºC |
| Compressor motor | RHUE-(3/4)AVHN | EK306AHD-27A2 | 0.24 at 20ºC |
| | RHUE-(5/6)AVHN | EK406AHD-36A2 | 0.20 at 20ºC |
| | RHUE-(5/6)AHN | EK405AHD-36D2 | 0.239 at 20ºC |



Все каталоги и инструкции здесь: https://splitsystema48.ru/instrukcii-po-ekspluatacii-kondicionerov.html

# 7.5. TROUBLESHOOTING OF CONTROL SYSTEM

## 7.5.1. System controller

- **Fault codes and diagnostics**

Fault codes are displayed in the default display as “FAUL 1” to “FAUL 13”. The table below describes the meaning of the fault code, the behaviour of the system during that fault condition and suggested remedial action to solve the problem.

| Code | Fault Description | System Behaviour | Remedy |
|---|---|---|---|
| FAUL 0 | No fault detected | System operates normally | |
| FAUL 1 | No supply water temperature sensor (TSUP) or sensor failure. | Heat Pump and Boiler (or Electric Heater) will be disabled. | Check sensor operation and sensor wiring. |
| FAUL 2 | No return water temperature sensor (TRET) or sensor failure. | The system will continue to operate, but the heat pump may operate even when the return temperature is too high. | Check sensor operation and sensor wiring. |
| FAUL 3 | No mixed water temperature sensor (TMIX) or sensor failure. | The mixing valve will close and no heating will be available. | Check sensor operation and sensor wiring. |
| FAUL 4 | No DHW temperature sensor (TDHW) or sensor failure. | There will be no DHW tank heating available. | Check sensor operation and sensor wiring. |
| FAUL 5 | No outdoor temperature sensor (TEXT) or sensor failure. | The system will continue to operate, but with a fixed outdoor temperature of 10°C. | Check sensor operation and sensor wiring. |
| FAUL 6 | Loss of communications with RF receiver. | System will continue to operate, but no room influence is possible, and control will not follow the thermostat time programme. | Check wiring to RF Receiver. Please refer to the RF Receiver installation guide. |
| FAUL 7 | Loss of connection to the heat pump control signal. | The heat pump and electric heater will be disabled. | Check control wiring to heat pump. |
| FAUL 8 | Water temperature goes above maximum (mixing system only). | The mixing valve will close to prevent overheating of underfloor system. | If problem persists, check system sensors and valve operation. |
| FAUL 9 | Fault notified by the heat pump. | Heat Pump and Electric Heater will be disabled. | Refer to the heat pump installation guide. To allow the electric heater or boiler to continue operating (manual release), press the + and SEL buttons simultaneously. |
| FAUL 10 | Failure of the binding between RF receiver and thermostat | System will continue to operate, but no room influence is possible, and control will not follow the thermostat time programme. | Check wiring to RF Receiver. Please refer to the RF Receiver installation guide. |
| FAUL 11 | Incorrect device connected to RF receiver terminals. | System will continue to operate, but no room influence is possible, and control will not follow the thermostat time programme. | Check wiring to RF Receiver. Please refer to the RF Receiver installation guide. |
| FAUL 12 | Failure of the RF receiver to receive messages from the thermostat. | System will continue to operate, but no room influence is possible, and control will not follow the thermostat time programme. | Check wiring to RF Receiver. Please refer to the RF Receiver installation guide. |
| FAUL 13 | The chosen extension is not allowed in this configuration. | The system will continue to operate normally without the extension. | Select a configuration where the extension is allowed. |

- **Reset to factory default condition**

Should it be necessary to reset the controller to the factory default condition, press the + and − buttons together during the power-on cycle. Remember to re-select the desired hydraulic configuration and set the necessary installation parameters.

- **Adjusting the time**

To adjust only the time during normal operation use the ⊕ or ⊖ buttons to adjust the time and press the green OK button again to confirm any changes.


Все каталоги и инструкции здесь: https://splitsystema48.ru/instrukcii-po-ekspluatacii-kondicionerov.html

## 7.5.2. System MMI Pack

| Symptom | Possible cause | Remedy |
|---|---|---|
| The Hitachi room unit has a blank LCD screen. | Batteries not installed. | Check to see if there are batteries in the battery coMPartment and the paper tab has been removed. |
| | Incorrect battery orientation. | Check that the batteries have been installed in the correct orientation. |
| | Exhausted batteries. | Replace with new batteries. |
| The Hitachi room unit shows a flashing symbol on the LCD screen. | Batteries are exhausted and need replacing. | Replace with new batteries. |
| The Hitachi room unit shows a flashing symbol on the LCD screen. | Fault in Hitachi room unit | Remove and re-insert the batteries in the Hitachi room unit. If the symbol does not clear itself in a few minutes call the installer. |
| The Hitachi room unit's LCD display works but the heating does not switch on. | No power to heating system. | Check that there is power to the heating system. |
| | Program does not call for heat. | Press the button and then press the to increase the temperature a few degrees above the current room temperature. The heating should come on after a few seconds. |
| | Wrong electrical connection. | Call the installer to check the electrical connections |
| The red LED on the receiver located next to heat pump controller is constantly on or flashing. | RF communication lost due to the wrong location of the Hitachi room unit. | Hook the Hitachi room unit back on the wall bracket or replace the Hitachi room unit on the table stand in the position where RF communication was reliable. |
| | RF communication fault. | Call installer. |
| The RF Receiver does not react to setpoint changes on the Room Unit. | The Room Unit and RF Receiver are not bound or the installer parameter 8:Su has not been set correctly. | Make sure that the 8:Su parameter value is set correctly. Reset the RF Receiver by pressing and holding the push button for 15 seconds. Then follow the binding / rebinding procedure as described in section 4. Binding / Rebinding Procedure. |
| After the binding procedure the red LED continues to flash on the RF Receiver. | Incorrect or incomplete binding procedure. Incorrect position of the Room Unit during binding. | Repeat the binding procedure. Repeat the binding procedure keeping approx. 1m distance between the RF Receiver and the Room Unit. |
| The red LED is on the RF Receiver (Communication loss) | The RF Receiver receives no RF messages from the Room Unit: RF signal is blocked due to wrong location of the Room Unit.<br><br>Room Unit batteries are exhausted. | Re-locate the Room Unit . Installing the System MMI Pack. Replace batteries in the Room Unit. |

- **Diagnostic mode**

The Room Unit has a user accessible mode that provides information useful to a remote service person and a means of checking whether the heating system is working. To access this press the button then press and hold the button for 5 seconds. The Room Unit will enter the user settings mode. Next press and hold the and buttons together. The following information can be viewed on the display by pressing the or buttons : model ID, date code (WW/YY) & checksum.



Все каталоги и инструкции здесь: https://splitsystema48.ru/instrukcii-po-ekspluatacii-kondicionerov.html

# 7.6. TROUBLESHOOTING OF ACCESSORIES

## 7.6.1. Pump kit

| Problem | Cause | Remedy |
|---|---|---|
| **The unit is making noises** | There is air in the unit. | Vent the unit. |
| | The pump volume rate is too strong. | Decrease the pump output by switching to a lower speed. |
| | The pump lift is too high. | Decrease the pump output by switching to a lower speed. |
| **The pump is making noises** | Cavitation noise has occured in the pump due to insufficient inlet pressure. | Check the pressure level/system admission pressure and increase to the admissible range. |
| | There is a foreign body inside the pump housing or impeller. | Disassemble the pump head and remove the foreign body. |
| | There is air in the pump. | Vent the pump/unit. |
| | Shut-off valves are not fully open. | Open the shut-off valves fully. |
| **Pump output too low** | There is a foreign body inside the pump housing or impeller. | Disassemble the pump head and remove the foreign body. |
| | Wrong pumping direction. | Exchange the pump pressure and suction sides. Observe the arrow indicating direction on the pump housing. |
| | Shut-off valves are not fully open. | Open the shut-off valves fully. |
| | Wrong direction of rotation. | Correct the electrical connection in the terminal box: |
| **Motor is switched on but fails to run** | Elektrical fuse faulty/has switched off. | Change fuse/switch on electrical connection.<br>Should the fuse blow several times in a row:<br>- Check the pump for electrical faults.<br>- Check the pump mains cable and electrical connection. |
| | Residual current operated circuit-breaker has tiggered. | Switch residual current operated circuit-breakes back on.<br>Should the circuit-breaker trip several times in arow:<br>- Check the pump for electrical faults.<br>- Check the pump mains cable and electrical connection. |
| | Undervoltage | Check the voltage at the pump (observe rating plate data). |
| | Winding damage | Call customer Services. |
| | Faulty terminal box | Call customer Services. |
| | Faulty capacitor | Replace the capacitor. |

| Problem | Motor is switched on but fails to run. | | | |
|---|---|---|---|---|
| **Cause** | Motor protection has switched the pump off as a result of: | | | |
| | **a)** Hydraulic overloading | **b)** A blockage | **c)** An excessive pump medium temperature. | **d)** An excessive ambient temperature. |
| **Remedy** | **a)** Reduce the pump on the pressure side to an operationg point which is on the characteristic line. | **b)** Fully remove the pump vent screw, check and rectify free runnig of pump rotor by turning the slotted end of the shaft with a screwdriver.<br><br>**Alternative:**<br>Disassemble the motor head and check; unblock by turning the impeller where necessary. If the blockage cannot be removed, contact Customer Services. | **c)** Decrease the pump medium temperature in accordance with the rating plate. | **d)** Decrease the ambient temperature, e.g. by insulating the pipes and fittings. |





Все каталоги и инструкции здесь: https://splitsystema48.ru/instrukcii-po-ekspluatacii-kondicionerov.html

## 7.6.2. WEH - Water Electric Heater

| Observed failure | Cause | Check item | Action |
|---|---|---|---|
| Electric power supply problems in WEH | Control signals from Systems Controls miss-connected or wrongly connected | Check connections between System Controller and WEH | Terminals 7, 8, 9 from System Controller connected to Terminals 7, 8, 9 WEH respectively |
| | | Check Voltage (230V) between terminals 8/9 and 8/7 in WEH and also in System Controller | Check Power Supply in System Controller |
| | | Check Voltage (230V) between Terminals A1 & A2 in Contactor Coils of WEH | Repair connections if required |
| | WEH has no Power Terminals L1~L3 have no voltage (440V/230V) | ELB, CB or Fuse protecting WEH are activated. There is some short-circuit, wrong connection or any earth leak | Check cable connections in WEH power circuit. Repair circuit and replace Fuse or Switch ON ELB/CB |
| | | Check possible miss connections in WEH power circuit | Check cable connections in WEH power circuit. Repair circuit. |
| | | Check Electric Resistances: 26,5 Ohms (5% Tolerance) | Replace Resistances if required |
| Problems in Water Circuit due to low Water Pressure or no Water in Water Circuit | LWPS is OFF [Water Pressure < 0,1 MPa] | Check Water Pressure (must be >0,1MPa) | Fill Water Circuit with enough pressure (< 0.1MPa) |
| | | Check if Water Circuit is locked | Check Valves and Water Circuit to ensure water circulation |
| | | Check if there is Water leaks | Check Water circuit and repair leaks if exist |
| Problems in Water Circuit due to excesive Water Temperature in Water Circuit | Thermostat Cut-Out activated [Excesive water temperature (<85ºC)] | Check Water Temperature and Thermostat state | Push reset button for thermostat re-start |

## 7.6.3. DHWT - Domestic Hot Water Tank

Troubleshooting-DHWT-200/300E/S-2,5H1E

| Observed failure | Cause | Check item | Action |
|---|---|---|---|
| "Electric power supply problems in DHWT" | "Control signals from Systems Controls miss-connected or wrongly connected" | "Check connections between System Controller and DHWT" | Terminals 11, 12 from System Controller connected to Terminals 3, 4 DHWT respectively |
| | | "Check Voltage (230V) between terminals N/3 and N/4 in DHWT" | "Check Power Supply in System Controller" |
| | | Check Voltage (230V) between Terminals 7 & 8 in Relay coils of DHWT | Repair connections if required |
| | "DHWT has no Power Terminals L~N have no voltage (230V)" | "ELB, CB or Fuse protecting DHWT are activated. There is some short-circuit, wrong connection or any earth leak" | "Check cable connections in DHWT power circuit. Repair circuit and replace Fuse or Switch ON ELB/CB" |
| | | Check possible miss connections in DHWT power circuit | "Check cable connections in DHWT power circuit. Repair circuit." |
| | | "Check Electric Resistances: 17,7 Ohms (5% Tolerance)" | Replace Resistances if required |
| "Problems in Water Circuit due to low Water Pressure or no Water in Water Circuit" | [Water Pressure < 0,1 MPa] | "Check Water Pressure (must be >0,1MPa)" | Fill Water Circuit with enough pressure (< 0.1MPa) |
| | | Check if Water Circuit is locked | Check Valves and Water Circuit to ensure water circulation |
| | | Check if there is Water leaks | "Check Water circuit and repair leaks if exist" |
| "Problems in Water Circuit due to excesive Water Temperature in Water Circuit" | "Thermostat Cut-Out activated [Excesive water temperature (<90ºC)]" | "Check Water Temperature and Thermostat state" | "Push reset button for thermostat re-start" |



Все каталоги и инструкции здесь: https://splitsystema48.ru/instrukcii-po-ekspluatacii-kondicionerov.html

# 8. SPARE PARTS

## CONTENTS

8.1. Spare parts of Yutaki ..... 230

8.1.1. Cycle and estructural parts ..... 230
8.1.2. Electrical parts ..... 231

8.2. Spare parts of accessories ..... 233

8.2.1. WEH - Water Electric Heater ..... 233
8.2.2. DHWT - Domestic Hot Water Tank ..... 234





Все каталоги и инструкции здесь: https://splitsystema48.ru/instrukcii-po-ekspluatacii-kondicionerov.html

# 8.1. SPARE PARTS OF YUTAKI

## 8.1.1. Cycle and estructural parts

### ◆ RHUE-(3~6)A(V)HN

| No | DESCRIPTION | Model Name | | | | | | | | REMARKS |
|---|---|---|---|---|---|---|---|---|---|---|
| | | RHUE3AVHN, 1~ 230V 50Hz | RHUE4AVHN, 1~ 230V 50Hz | RHUE5AVHN, 1~ 230V 50Hz | RHUE5AHN, 3~ 400V 50Hz | RHUE6AVHN, 1~ 230V 50Hz | RHUE6AHN, 3~ 400V 50Hz | | | |
| | | Qty. | Qty. | Qty. | Qty. | Qty. | Qty. | | | |
| U00D | Pump | 1 | 1 | 1 | 1 | 1 | 1 | | | Accessory (Pump Kit A) |
| U00E | Pump | 1 | 1 | 1 | 1 | 1 | 1 | | | Accessory (Pump Kit B) |
| U00G | Acoustical Cover 46 | 1 | 1 | 1 | 1 | 1 | 1 | | | Compressor Jacket |
| U01 | Pressure SW | 1 | 1 | 1 | 1 | 1 | 1 | | | Protection |
| U15A | Thermistor | 1 | 1 | 1 | 1 | 1 | 1 | | | THMwi |
| U15B | Thermistor | 1 | 1 | 1 | 1 | 1 | 1 | | | THMwo |
| U15C | Thermistr | 1 | 1 | 1 | 1 | 1 | 1 | | | THMa |
| U15D | Thermistor | 1 | 1 | 1 | 1 | 1 | 1 | | | THMd |
| U15E | Thermistor | 1 | 1 | 1 | 1 | 1 | 1 | | | THMeh |
| U15F | Thermistor | 1 | 1 | 1 | 1 | 1 | 1 | | | THMec |
| U15G | Thermistr | 1 | 1 | 1 | 1 | 1 | 1 | | | THMs |
| U19A | High Pressure Sensor | 1 | 1 | 1 | 1 | 1 | 1 | | | Pd |
| U19B | Low Pressure Sensor | 1 | 1 | 1 | 1 | 1 | 1 | | | Ps |
| U21A | Expansion Valve | 1 | 1 | 1 | 1 | 1 | 1 | | | By-pass line |
| U21B | EXPV Coil | 1 | 1 | 1 | 1 | 1 | 1 | | | |
| U21C | Expansion Valve | 1 | 1 | 1 | 1 | 1 | 1 | | | Main line |
| U21D | EXPV Coil | 1 | 1 | 1 | 1 | 1 | 1 | | | |
| U21E | Capillary Assy | 1 | 1 | 1 | 1 | 1 | 1 | | | |
| U28 | Check JA | 3 | 3 | 3 | 3 | 3 | 3 | | | |
| U30A | Strainer | 1 | 1 | 1 | 1 | 1 | 1 | | | |
| U30B | Strainer | 2 | 2 | 2 | 2 | 2 | 2 | | | |
| U30C | Silencer | 1 | 1 | 1 | 1 | 1 | 1 | | | |
| U32A | VP-RUBBER 2 | 2 | 2 | 2 | 2 | 2 | 2 | | | |
| U32B | VP-RUBBER 1 | 4 | 4 | 4 | 4 | 4 | 4 | | | |
| U34A | Front Protector Net | 2 | 2 | 2 | 2 | 2 | 2 | | | Outlet (for Fan) |
| U34B | Protector Net L Assy | 1 | 1 | 1 | 1 | 1 | 1 | | | Inlet (for Condenser) |
| U38A | Wpipe in 1 | 1 | 1 | 1 | 1 | 1 | 1 | | | |
| U38B | Wpipe in 2 | 1 | 1 | 1 | 1 | 1 | 1 | | | |
| U40 | Air Heat Exchanger | 1 | 1 | | | | | | | Assembly |
| U40 | Air Heat Exchanger | | | 1 | 1 | 1 | 1 | | | Assembly |
| U41 | Water Heat Exchanger | 1 | 1 | 1 | 1 | 1 | 1 | | | Assembly |
| U51 | Propeller Fan | 2 | 2 | 2 | 2 | 2 | 2 | | | |
| U58A | Accumulator | 1 | 1 | 1 | 1 | 1 | 1 | | | |
| U58B | L-Tank | 1 | 1 | 1 | 1 | 1 | 1 | | | |
| U65C | Handle | 3 | 3 | 3 | 3 | 3 | 3 | | | |
| U65D | H Cover | 1 | 1 | 1 | 1 | 1 | 1 | | | |
| U65E | Rubber Cap | 1 | 1 | 1 | 1 | 1 | 1 | | | |
| U65F | TH Plate | 1 | 1 | 1 | 1 | 1 | 1 | | | |
| U70 | Compressor | 1 | 1 | 1 | 1 | 1 | 1 | | | EK306AHD-27A2 |
| U71A | Fan Motor | 1 | 1 | 1 | 1 | 1 | 1 | | | 74W |
| U71B | Fan Motor | 1 | 1 | 1 | 1 | 1 | 1 | | | 74W |
| U77A | Solenoid Valve | 1 | 1 | 1 | 1 | 1 | 1 | | | |
| U77B | Solenoid Valve | 1 | 1 | 1 | 1 | 1 | 1 | | | |
| U77C | Coil for Solenoide valve | 2 | 2 | 2 | 2 | 2 | 2 | | | |
| U78 | Oil Heater | 4 | 4 | 4 | 4 | 4 | 4 | | | 40W |
| U79 | 4 Way Valve | 1 | 1 | 1 | 1 | 1 | 1 | | | |
| U81 | Coil for 4 Way Valve | 1 | 1 | 1 | 1 | 1 | 1 | | | |
| U92 | Air Purge | 1 | 1 | 1 | 1 | 1 | 1 | | | |
| U98A | Service Cover L Assy | 1 | 1 | 1 | 1 | 1 | 1 | | | Assembly |
| U98B | Rear Cover L Assy | 1 | 1 | 1 | 1 | 1 | 1 | | | Assembly |
| U98C | Upper Cover Assy | 1 | 1 | 1 | 1 | 1 | 1 | | | Assembly |
| U98D | Shroud L | 1 | 1 | 1 | 1 | 1 | 1 | | | |
| U98E | S Cover B | 1 | 1 | 1 | 1 | 1 | 1 | | | |
| U98F | Pipe Cover B | 1 | 1 | 1 | 1 | 1 | 1 | | | |
| U98G | B-Base Assy | 1 | 1 | 1 | 1 | 1 | 1 | | | Assembly |
| U98L | Partition Assy | 1 | 1 | 1 | 1 | 1 | 1 | | | Assembly |
| U98M | Motor Clamp L Assy | 1 | 1 | 1 | 1 | 1 | 1 | | | Assembly |
| U99 | Water Heater | 1 | 1 | 1 | 1 | 1 | 1 | | | |

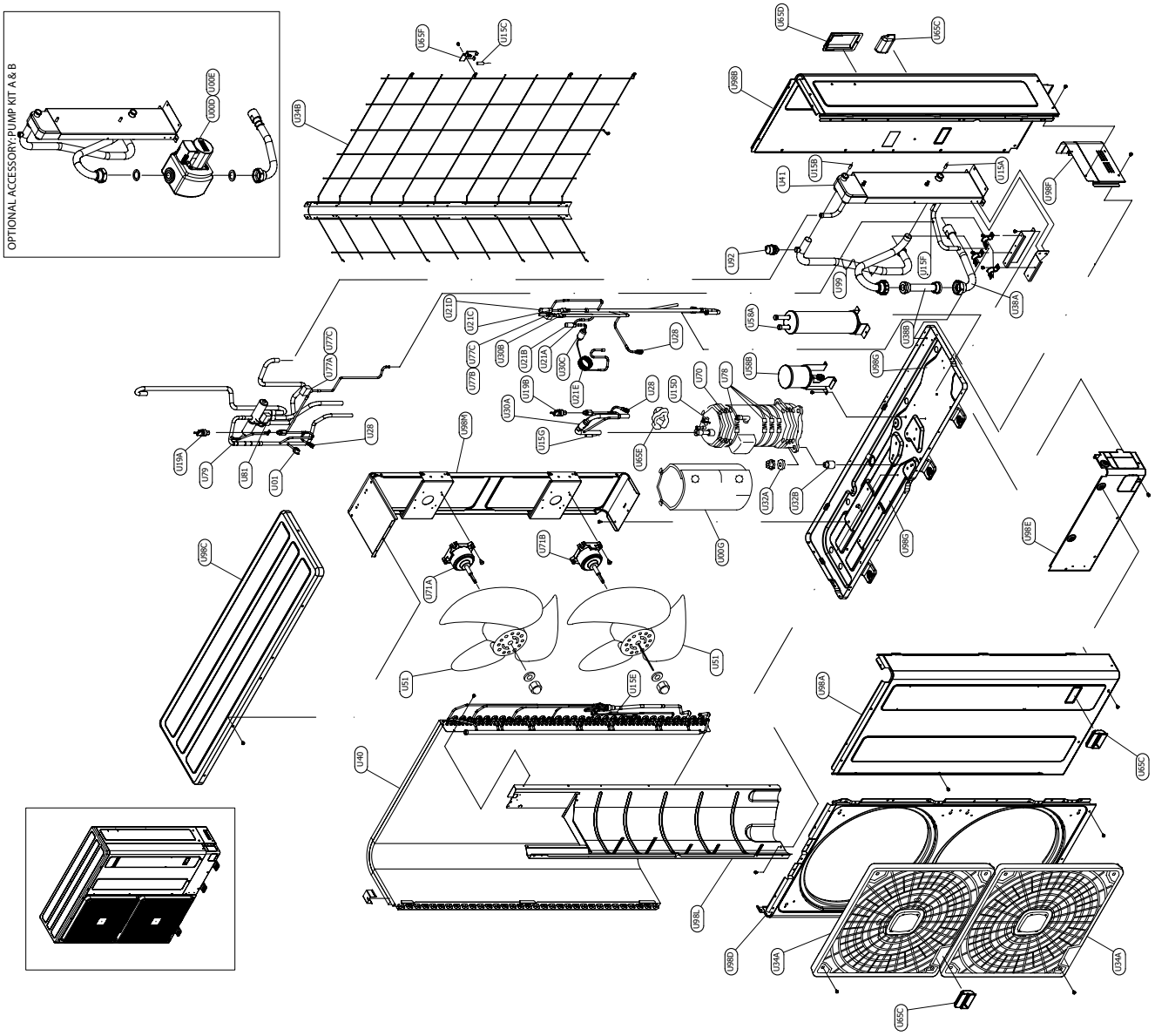




Все каталоги и инструкции здесь: https://splitsystema48.ru/instrukcii-po-ekspluatacii-kondicionerov.html

## 8.1.2. Electrical parts

◆ **RHUE-(3~6)AVHN**

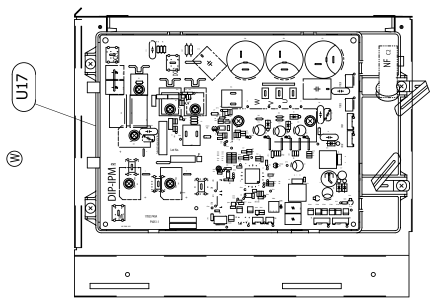


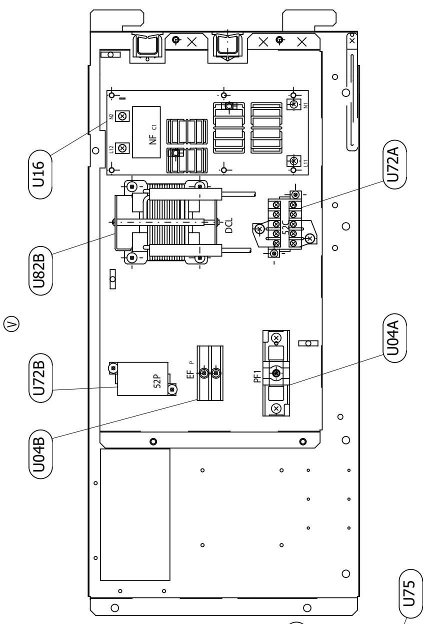


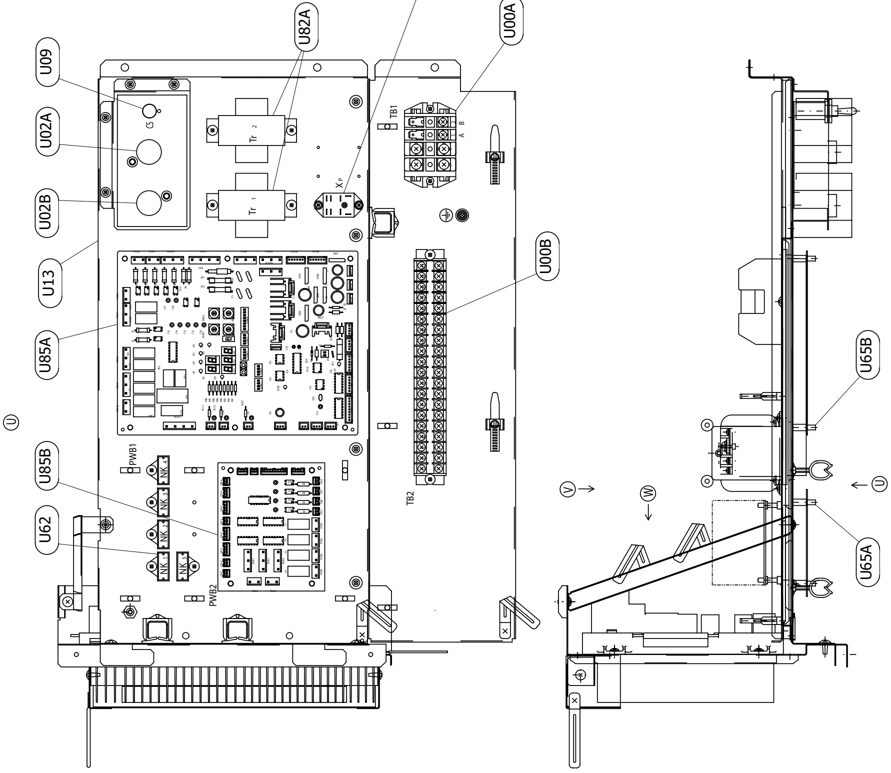


| No | DESCRIPTION | RHUE3AVHN, 1~230V 50Hz Qty. | RHUE4AVHN, 1~230V 50Hz Qty. | RHUE5AVHN, 1~230V 50Hz Qty. | RHUE5AHN, 3~400V 50Hz Qty. | RHUE6AVHN, 1~230V 50Hz Qty. | RHUE6AHN, 3~400V 50Hz Qty. | REMARKS |
|---|---|---|---|---|---|---|---|---|
| U00A | Terminal Board | 1 | 1 | 1 | 1 | 1 | 1 | |
| U00B | Terminal Board | 1 | 1 | 1 | 1 | 1 | 1 | |
| U02A | Push Button Switch | 1 | 1 | 1 | 1 | 1 | 1 | ON (white) |
| U02B | Push Button Switch | 1 | 1 | 1 | 1 | 1 | 1 | OFF (black) |
| U04A | Fuse | 1 | 1 | 1 | 2 | 1 | 2 | 40A |
| U04B | Fuse | 1 | 1 | 1 | 1 | 1 | 1 | 3A, Power Fuse for Pump |
| U09 | Snap Switch | 1 | 1 | 1 | 1 | 1 | 1 | |
| U13 | Electrical Wiring Diagram | 1 | 1 | 1 | 1 | 1 | 1 | Assembly (Steel Plates+Components+Harness) |
| U16A | Noise Filter | 1 | 1 | 1 | | 1 | | 30A |
| U16A | Noise Filter | | | | 1 | | 1 | 30A |
| U17 | Inverter Fin Assy | 1 | 1 | 1 | 1 | 1 | 1 | DIP-IPM (25A) |
| U62 | Spark Killer | 5 | 5 | 5 | 5 | 5 | 5 | |
| U65A | Spacer | 4 | 4 | 4 | 4 | 4 | 4 | |
| U65B | Spacer | 6 | 6 | 6 | 6 | 6 | 6 | |
| U72A | Magnetic Contactor | 1 | 1 | 1 | 1 | 1 | 1 | |
| U72B | Magnetic Contactor | 1 | 1 | 1 | 1 | 1 | 1 | Contactor for Pump |
| U75 | Aux Relay | 1 | 1 | 1 | 1 | 1 | 1 | |
| U82A | Transformer | 2 | 2 | 2 | 2 | 2 | 2 | |
| U82B | Reactor | 1 | 1 | 1 | 1 | 1 | 1 | |
| U85A | Printed Circuit Board | 1 | 1 | 1 | 1 | 1 | 1 | PCB Main (CO041 Assy) |
| U85B | Printed Circuit Board | 1 | 1 | 1 | 1 | 1 | 1 | I/O PCB (CO011 Assy) |

Model Name

8



Все каталоги и инструкции здесь: https://splitsystema48.ru/instrukcii-po-ekspluatacii-kondicionerov.html

## ◆ RHUE-(5/6)AHN

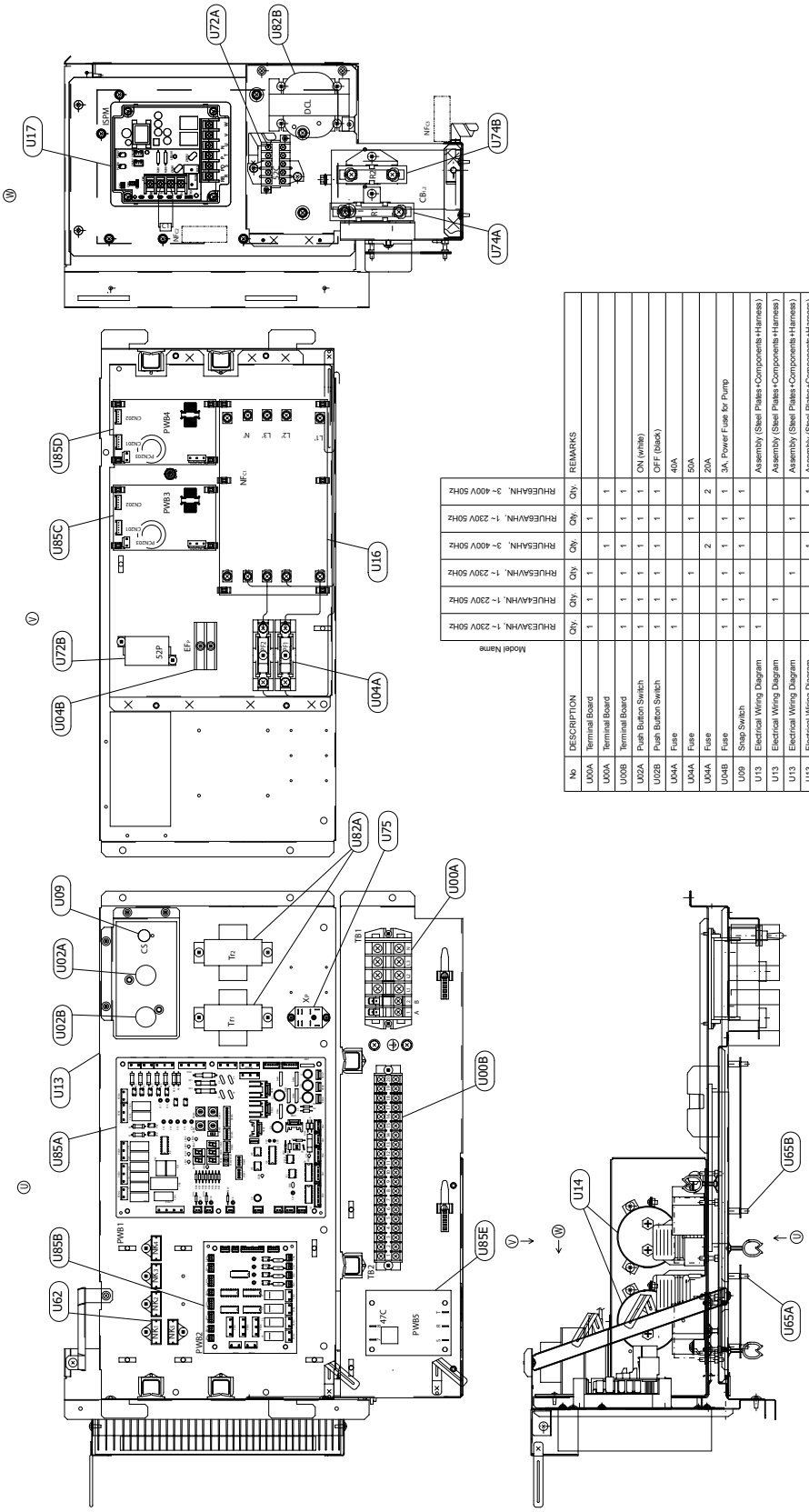


| No | DESCRIPTION | RHUE3AVHN, 1~ 230V 50HZ Qty. | RHUE4AVHN, 1~ 230V 50HZ Qty. | RHUE5AVHN, 1~ 230V 50HZ Qty. | RHUE5AHN, 3~ 400V 50HZ Qty. | RHUE6AVHN, 1~ 230V 50HZ Qty. | RHUE6AHN, 3~ 400V 50HZ Qty. | REMARKS |
|---|---|---|---|---|---|---|---|---|
| U00A | Terminal Board | 1 | 1 | 1 | 1 | 1 | | |
| U00A | Terminal Board | | | | 1 | | 1 | |
| U00B | Terminal Board | 1 | 1 | 1 | 1 | 1 | 1 | |
| U02A | Push Button Switch | 1 | 1 | 1 | 1 | 1 | 1 | ON (white) |
| U02B | Push Button Switch | 1 | 1 | 1 | 1 | 1 | 1 | OFF (black) |
| U04A | Fuse | 1 | 1 | 1 | | | | 40A |
| U04A | Fuse | | | 1 | | 1 | | 50A |
| U04A | Fuse | | | | 2 | | 2 | 20A |
| U04B | Fuse | 1 | 1 | 1 | 1 | 1 | 1 | 3A, Power Fuse for Pump |
| U09 | Snap Switch | 1 | 1 | 1 | 1 | 1 | 1 | |
| U13 | Electrical Wiring Diagram | 1 | | | | | | Assembly (Steel Plates+Components+Harness) |
| U13 | Electrical Wiring Diagram | | 1 | | | | | Assembly (Steel Plates+Components+Harness) |
| U13 | Electrical Wiring Diagram | | | 1 | | 1 | | Assembly (Steel Plates+Components+Harness) |
| U13 | Electrical Wiring Diagram | | | | 1 | | 1 | Assembly (Steel Plates+Components+Harness) |
| U14 | Capacitor | | | | 2 | | 2 | 2700μf |
| U16A | Noise Filter | 1 | 1 | 1 | 1 | 1 | 1 | 30A |
| U16A | Noise Filter | | | | 1 | | 1 | 30A |
| U17 | Inverter Fin Assy | 1 | 1 | | | | | DIP-IPM (17A) |
| U17 | Inverter Fin Assy | | | 1 | | 1 | | DIP-IPM (25A) |
| U17 | Inverter Module | | | | 1 | | 1 | ISPM |
| U62 | Spark Killer | 5 | 5 | 5 | 5 | 5 | 5 | |
| U65A | Spacer | 4 | 4 | 4 | 4 | 4 | 4 | |
| U65B | Spacer | 6 | 6 | 6 | 6 | 6 | 6 | |
| U72A | Magnetic Contactor | 1 | 1 | 1 | 1 | 1 | 1 | |
| U72B | Magnetic Contactor | 1 | 1 | 1 | 1 | 1 | 1 | Contactor for Pump |
| U74A | Resistor | | | | 1 | | 1 | |
| U74B | Resistor | | | | 1 | | 1 | |
| U75 | Aux Relay | 1 | 1 | 1 | 1 | 1 | 1 | |
| U82A | Transformer | 2 | 2 | 2 | 2 | 2 | 2 | |
| U82B | Reactor | 1 | 1 | | | | | |
| U82B | Reactor | | | 1 | | 1 | | |
| U82B | Reactor | | | | 1 | | 1 | |
| U85A | Printed Circuit Board | 1 | 1 | 1 | 1 | 1 | 1 | PCB Main (CC041 Assy) |
| U85B | Printed Circuit Board | 1 | 1 | 1 | 1 | 1 | 1 | I/O PCB (CC011 Assy) |
| U85C | Printed Circuit Board | | | | 1 | | 1 | PCB2 For Fan Motor 1 (PC024 Assy) |
| U85D | Printed Circuit Board | | | | 1 | | 1 | PCB2 For Fan Motor 2 (PC024 Assy) |
| U85E | RPP Relay | | | | 1 | | 1 | Reversing Phase Protection |



Все каталоги и инструкции здесь: https://splitsystema48.ru/instrukcii-po-ekspluatacii-kondicionerov.html

# 8.2. SPARE PARTS OF ACCESSORIES

## 8.2.1. WEH - Water Electric Heater

LOCATION OF SPARE PARTS IN THE UNIT FOR MODEL:
WEH-6E

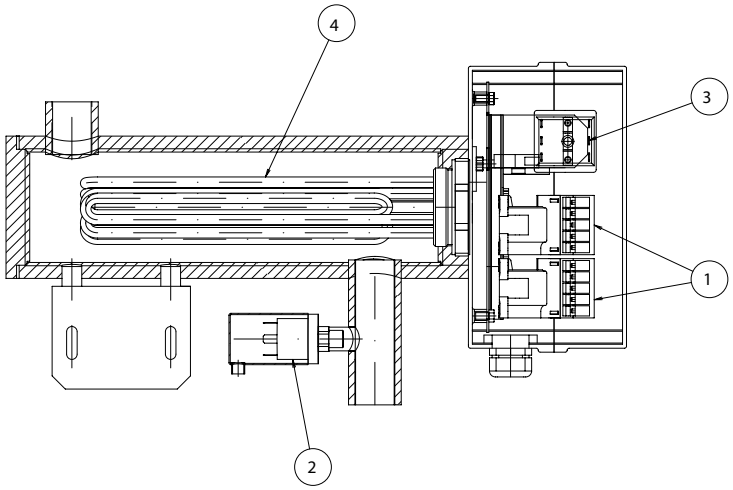


LOCATION OF ELECTRICAL EQUIPMENT IN THE ELECTRICAL BOX

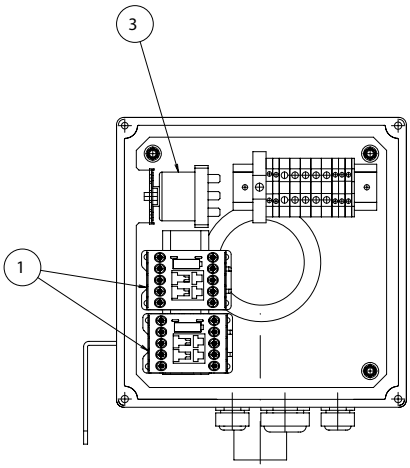


| | | MODEL NAME | |
|---|---|---|---|
| | | WEH-6E | |
| No. | DESCRIPTION | Qty | REMARKS |
| 1 | CONTACTOR | 2 | AS09-30-10-26M (20A AC1) |
| 2 | PRESSURE SWITCH | 1 | XP600 (1 bar set) |
| 3 | THERMOSTAT | 1 | 85°C Cut Out |
| 4 | RESISTOR | 1 | 2000W +5-10% 230V |



Все каталоги и инструкции здесь: https://splitsystema48.ru/instrukcii-po-ekspluatacii-kondicionerov.html

## 8.2.2. DHWT - Domestic Hot Water Tank

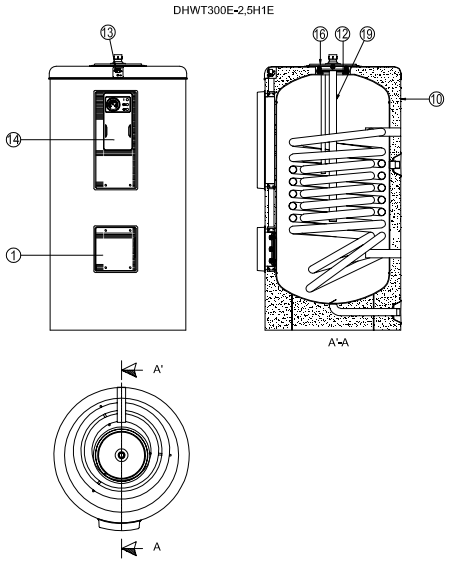


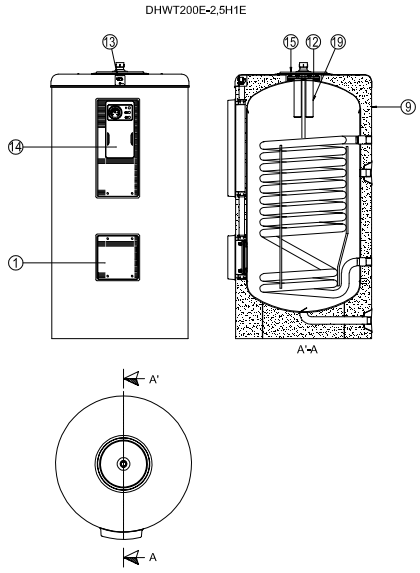


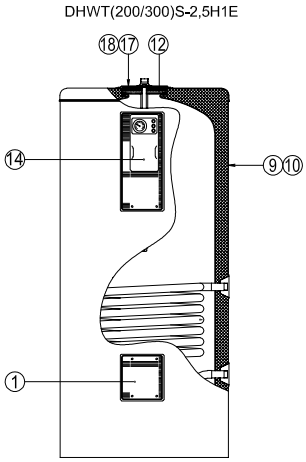




Все каталоги и инструкции здесь: https://splitsystema48.ru/instrukcii-po-ekspluatacii-kondicionerov.html

Front View of Control Panel

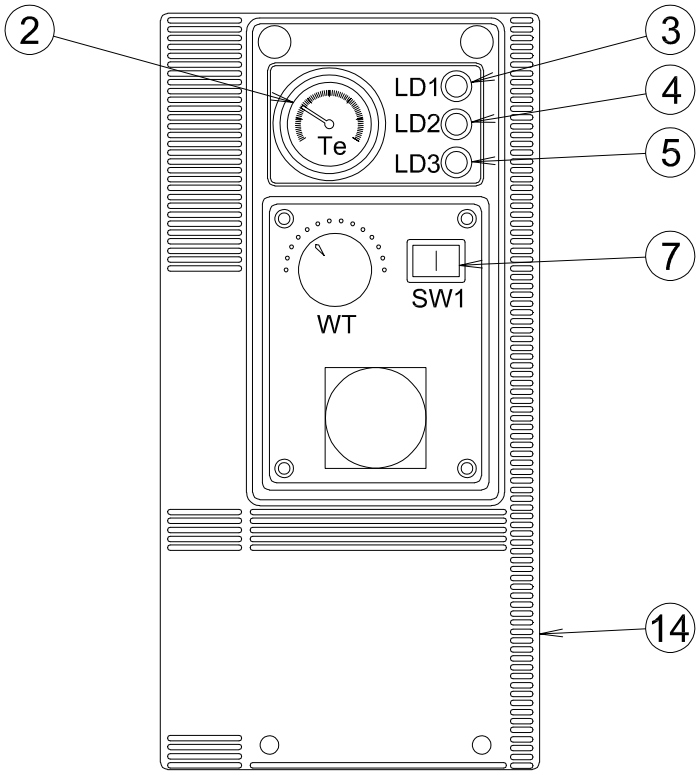


Rear View of Control Panel

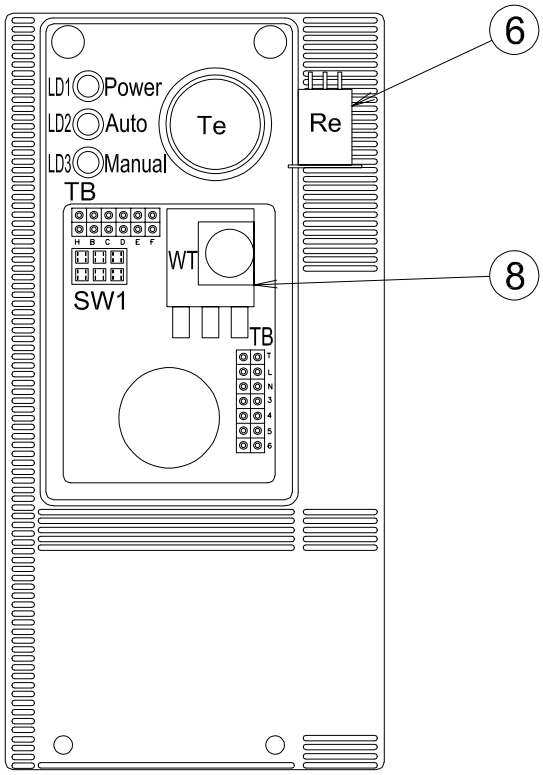


| | MODEL NAME | DHWT200E-2.5H1E | DHWT300E-2.5H1E | DHWT200S-2.5H1E | DHWT300S-2.5H1E | |
|---|---|---|---|---|---|---|
| No. | DESCRIPTION | Qty | Qty | Qty | Qty | REMARKS |
| 1 | Side Cover | 1 | 1 | 1 | 1 | |
| 2 | Thermometer | 1 | 1 | 1 | 1 | |
| 3 | Green LED | 1 | 1 | 1 | 1 | Power ON |
| 4 | Orange LED | 1 | 1 | 1 | 1 | Automatic ON |
| 5 | Red LED | 1 | 1 | 1 | 1 | Manual ON |
| 6 | Relay | 1 | 1 | 1 | 1 | 220/240 VAC |
| 7 | Bipolar Switch | 1 | 1 | 1 | 1 | Switch (Auto/Manual) |
| 8 | Thermostat | 1 | 1 | 1 | 1 | |
| 9 | External Covering | 1 | | 1 | | |
| 10 | External Covering | | 1 | | 1 | |
| 11 | Side Mouth Seal | 1 | 1 | 1 | 1 | |
| 12 | Upper Mouth Seal | 1 | 1 | 1 | 1 | |
| 13 | Anode Load Meter | 1 | 1 | | | |
| 14 | Panel Control KIT | 1 | 1 | 1 | 1 | E-Box Assembly |
| 15 | Upper Side KIT | 1 | | | | Assembly |
| 16 | Upper Side KIT | | 1 | | | Assembly |
| 17 | Upper Side KIT | | | 1 | | Assembly |
| 18 | Upper Side KIT | | | | 1 | Assembly |
| 19 | Magnesium anodes KIT | 1 | 1 | | | Assembly |
| 20 | Electric Heater | 1 | 1 | | | |
| 21 | Electric Heater | | | 1 | 1 | |





Все каталоги и инструкции здесь: https://splitsystema48.ru/instrukcii-po-ekspluatacii-kondicionerov.html

**Все каталоги и инструкции здесь:** https://splitsystema48.ru/instrukcii-po-ekspluatacii-kondicionerov.html

# 9. SERVICING

## CONTENTS

9.1. RHUE-(3~6)A(V)HN ..... 239

9.1.1. Removing service cover ..... 239
9.1.2. Removing air outlet grille ..... 239
9.1.3. Removing upper cover ..... 240
9.1.4. Removing the lower part of service panel and rear panel ..... 240
9.1.5. Removing Yutaki fan motor ..... 241
9.1.7. Removing the compressor ..... 242
9.1.6. Mounting Yutaki fan motor ..... 242
9.1.8. Removing high pressure switch ..... 245
9.1.9. Opening electrical box (P-mounting plate) ..... 246
9.1.10. Removing the coils for the reversing and solenoid valves ..... 247
9.1.11. Removing electronic expansion valve coils ..... 248
9.1.12. Removing pressure switches ..... 249
9.1.13. Removing reversing valve ..... 250
9.1.14. Removing expansion valves ..... 250
9.1.15. Removing solenoid valve ..... 251
9.1.16. Removing electrical components ..... 252
9.1.17. Removing inverter components ..... 253
9.1.18. Removing the ISPM ..... 254
9.1.19. Removing the DIP-IPM ..... 255
9.1.20. Removing the electrical-noise filter ..... 256
9.1.21. Removing other electrical components ..... 257



Все каталоги и инструкции здесь: https://splitsystema48.ru/instrukcii-po-ekspluatacii-kondicionerov.html

**DANGER**

- *Electrical hazard. Risk of death.*
  - *Before performing any of the service operations described in this chapter, turn all the main switches off and place security lockers or convenient warning indicators in order to prevent them from turning on accidentally.*
  - *Check and be sure that the LED201 (Red) on the inverter PCB is OFF for all electrical maintenance.*
  - *Do NOT touch the electrical components when the LED201 (Red) on the inverter PCB is ON to avoid electrical shock.*

**WARNING**

- *Crush hazards. Can cause serious injuries.*
  - *In case of sharped edged parts, as covers, use security gloves to avoid getting injured.*
  - *In case of blocked or stucked parts, use appropiated tools and eventually lubricants to release them.*
  - *When performing brazing work, besides security gloves it is a must to wear convenient eye protection.*
  - *Do not put any strange material (sticks, etc) into the air inlet and outlet. These units have high speed rotating fans and it is dangerous that any object touches them.*
- *Electrical hazard. Can cause serious injuries.*
  - *Do not pour water into the unit. These products are equipped with electrical parts. If water contacts with electrical components then it will cause a serious electrical shock.*
  - *Do not open the service cover or access the unit without disconnecting the main power supply.*
  - *In case of fire turn OFF the main switch, put out the fire at once and contact your service contractor.*
- *Flamable liquids and objects. Fire risk.*
  - *Check to ensure whether there are flammable things around or not when using a burner for pipe connections, if not, oil existing pipe inside may ignite.*
  - *Do not use any sprays such as insecticide, lacquer, hair spray or other flammable gases within approximately one (1) meter from the system.*

**NOTE**

- *Do not expose the refrigerant cycle to the atmosphere for a long period in order to avoid mixing the water and foreign particles into the refrigerant cycle. After removing compressor, replace it quickly. If exposed for a long period, seal the suction pipe and discharge pipe.*
- *Remove the cap for the compressor just before replacing the compressor. Before mounting the compressor, seal the suction pipe and discharge pipe with a tape to protect the compressor from foreign particles. Remove the tape at pipe connection.*
- *Do not expose the refrigerant cycle to the atmosphere for a long period in order to avoid mixing the water and foreign particles into the refrigerant cycle. After removing compressor, replace it quickly. If exposed for a long period, seal the suction pipe and discharge pipe.*
- *If circuit breaker or fuse is often activated, stop the system and contact your service contractor.*



Все каталоги и инструкции здесь: https://splitsystema48.ru/instrukcii-po-ekspluatacii-kondicionerov.html

# 9.1. RHUE-(3~6)A(V)HN

## 9.1.1. Removing service cover

Remove the main parts according to the following procedures.

| NOTE |
|---|
| - *Screws are represented as black points in the figure besides.To reassemble, perform the procedures in reverse.*<br>- *To prevent contamination of the refrigerant with water or foreign particles, do not expose open pipes to atmosphere for long periods.*<br>- *If necessary, seal pipe ends using caps or tape.* |

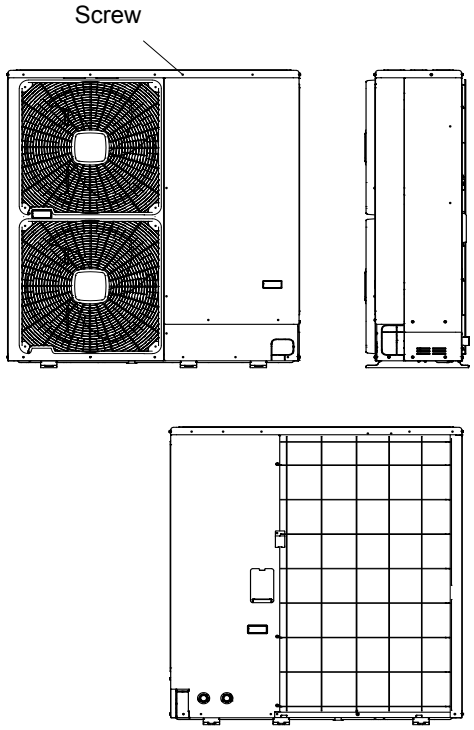


1. Remove the nine (9) fixing screws of the upper cover.
2. Remove the fourteen (14) fixing screws of the front cover.
3. Slide the service cover downward and remove it.
4. Pay attention of not falling off the service cover.

## 9.1.2. Removing air outlet grille

1. Remove the eight (8) fixing screws.
2. Lift the air outlet grille holding the lower parts.
3. Release the extruded hook of the air outlet grille from the shroud.

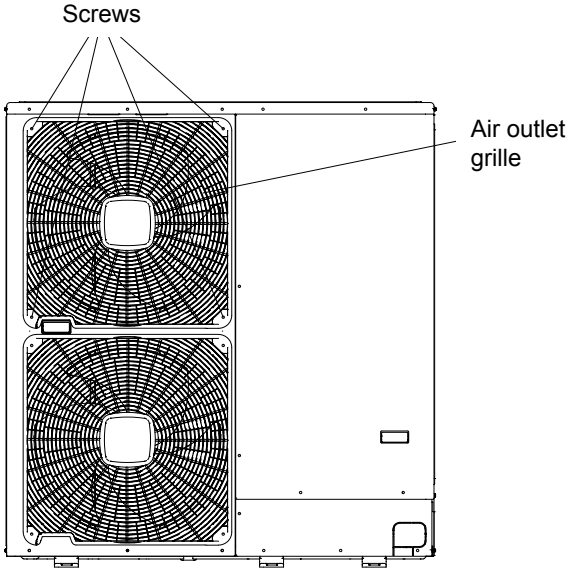




Все каталоги и инструкции здесь: https://splitsystema48.ru/instrukcii-po-ekspluatacii-kondicionerov.html

### 9.1.3. Removing upper cover

1. Remove the nine (9) screws fixing the upper cover
2. Lift the upper cover upwards.

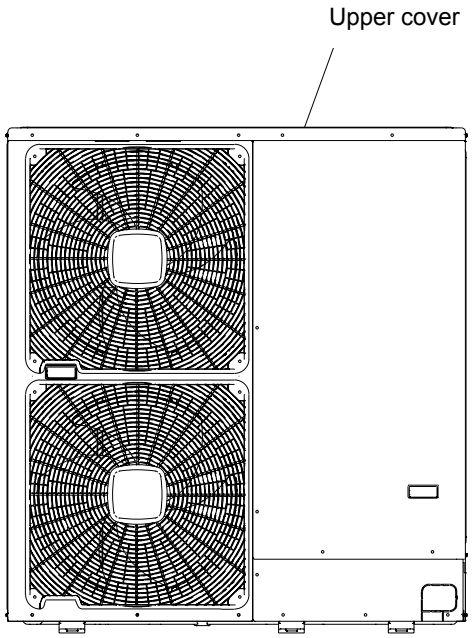


### 9.1.4. Removing the lower part of service panel and rear panel

1. Remove the four (4) fixing screws at the lower part of the service panel and remove the lower part of the service panel by pulling towards the front side. Remove the fixing screws of the rear panel and remove the rear panel.

| | NOTE |
|---|---|
| - | *The length of fixing scews for the Yutaki temperature thermistor is different than all other screws in the machine, as an assembly poka-yoke.* |

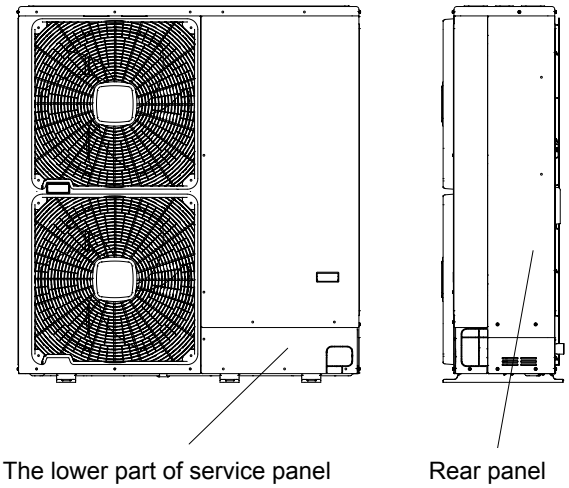




Все каталоги и инструкции здесь: https://splitsystema48.ru/instrukcii-po-ekspluatacii-kondicionerov.html

## 9.1.5. Removing Yutaki fan motor

1. Remove the service cover according to the section “Removing service cover” in this chapter.

2. Remove the air outlet grille according to the section “Removing air outlet grille” in this chapter.

3. Remove the upper cover according to the section “Removing upper cover” in this chapter.

4. Disassembly the fan blade by removing the cap nuts and washers fixing the fan blade onto the motor shaft.

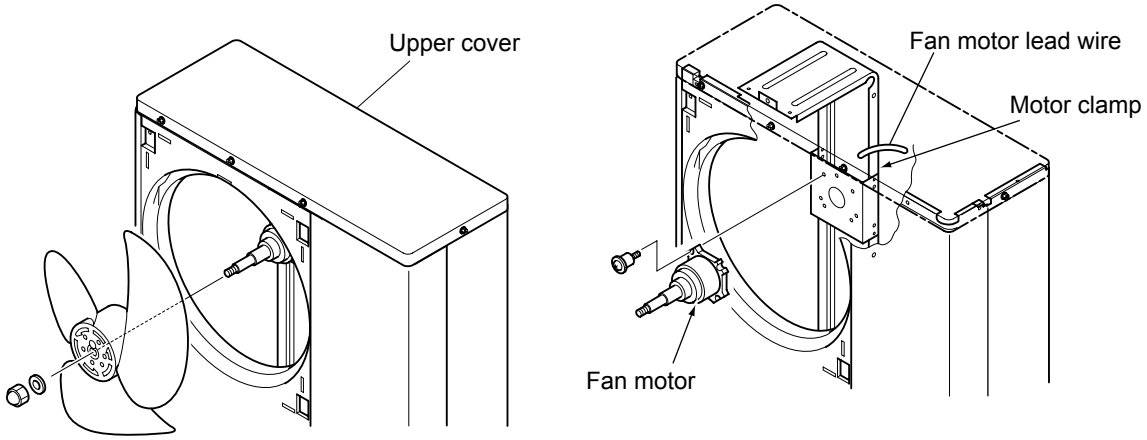


| Fan components and technical features | | |
|---|---|---|
| Power supply | | 380-415V/50Hz |
| Fan motor comp. No. | DC fan motor | PCB5<br>PCN203 (1, 3)<br>CN201 (2, 3, 4) |
| | AC fan motor | PCB3<br>PCN404(White) |
| Screw for motor fixing | DC Fan Motor | M6 Screw with spacer x 4 |
| | AC Fan Motor | M8 Screw x 4 |
| Motor clamp and wiring fixing position | | 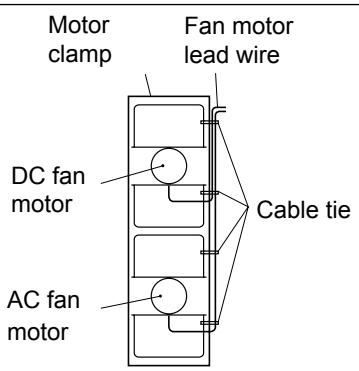 |


Все каталоги и инструкции здесь: https://splitsystema48.ru/instrukcii-po-ekspluatacii-kondicionerov.html

### 9.1.6. Mounting Yutaki fan motor

1. Remove the service cover according to the section “Removing service cover” in this chapter.

2. Remove the air outlet grille according to the section “Removing air outlet grille” in this chapter.

3. Remove the upper cover according to the section “Removing upper cover” in this chapter.

4. Disassembly the fan blade by removing the cap nuts and washers fixing the fan blade onto the motor shaft.

   If the fan blade get stuck when trying to remove it, use a puller to disassembly the fan.

5. Remove the fan motor connector from the PCB3 and PCB5 at the electrical box.
   - Cut off the cable tie that fixes the lead wire of the fan motor.
   - Remove the four (4) screws that fix the motor to the motor clamp.

6. Fix the motor wire with the cable tie or the cord clamp. If not, it may cause the disconnection of the fan motor’s lead wire.

7. In order to avoid cutting edges, mount the rubber bush at the partition plate when inserting the motor wire through it. If not, it may cause the disconnection to the fan motor’s lead wire.

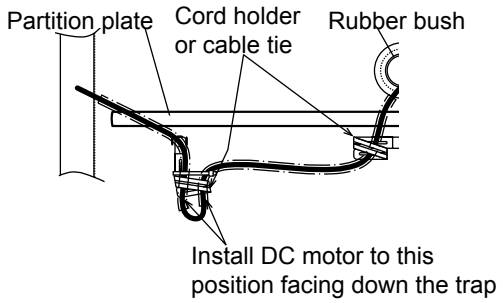


**NOTE**

- *When assembling the motor, ensure the cables section directly downwards. Fix the protection tube edge end downwards to ensure water from keeping inside it*
- *Fix the motor wires onto the motor clamp with a cable tie to prevent them from collisioning the fan blades.*
- *Assembling the fan blade: Insert the skidding protection part of fan boss in accordance with the cutting part of the motor shaft, and fix the screw after dismounting the screwed part of the shaft. (Tightening Torque of 20 N.m)*
- *When connecting the motor wire, check to ensure that the colors of the connectors on the PCB3 and PCB5 are matched with the wires.*
- *Fix the air outlet grille firmly to the shroud.*

### 9.1.7. Removing the compressor

1. Remove the service cover and the lower part of the service panel according to the section “Removing service cover” and the section “Removing lower part of service panel and rear panel”. In case that the Yutaki is installed close to a wall closely, sepparate first the Yutaki from the wall.

2. Collect the refrigerant from the liquid stop valve, the gas stop valve and the check joint at the piping.

3. Open the sound insulation cover wrapped around the compressor and remove the terminal box cover at the compressor fixed by one (1) screw. Disconnect the compressor wires in the terminal box and remove the sound insulation cover.

**NOTE**

- *Check and take note of each terminal number and indications for its correct connection at the reasembling process. If wires are connected in incorrect order, it will lead to a compressor failure.*

4. Remove the rubber cap and the thermistor on the top of the compressor.

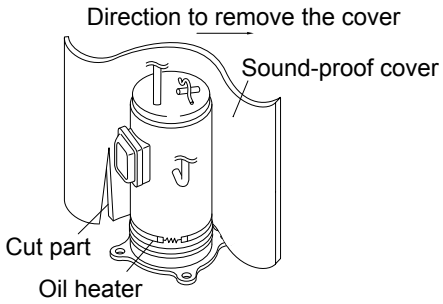




Все каталоги и инструкции здесь: https://splitsystema48.ru/instrukcii-po-ekspluatacii-kondicionerov.html

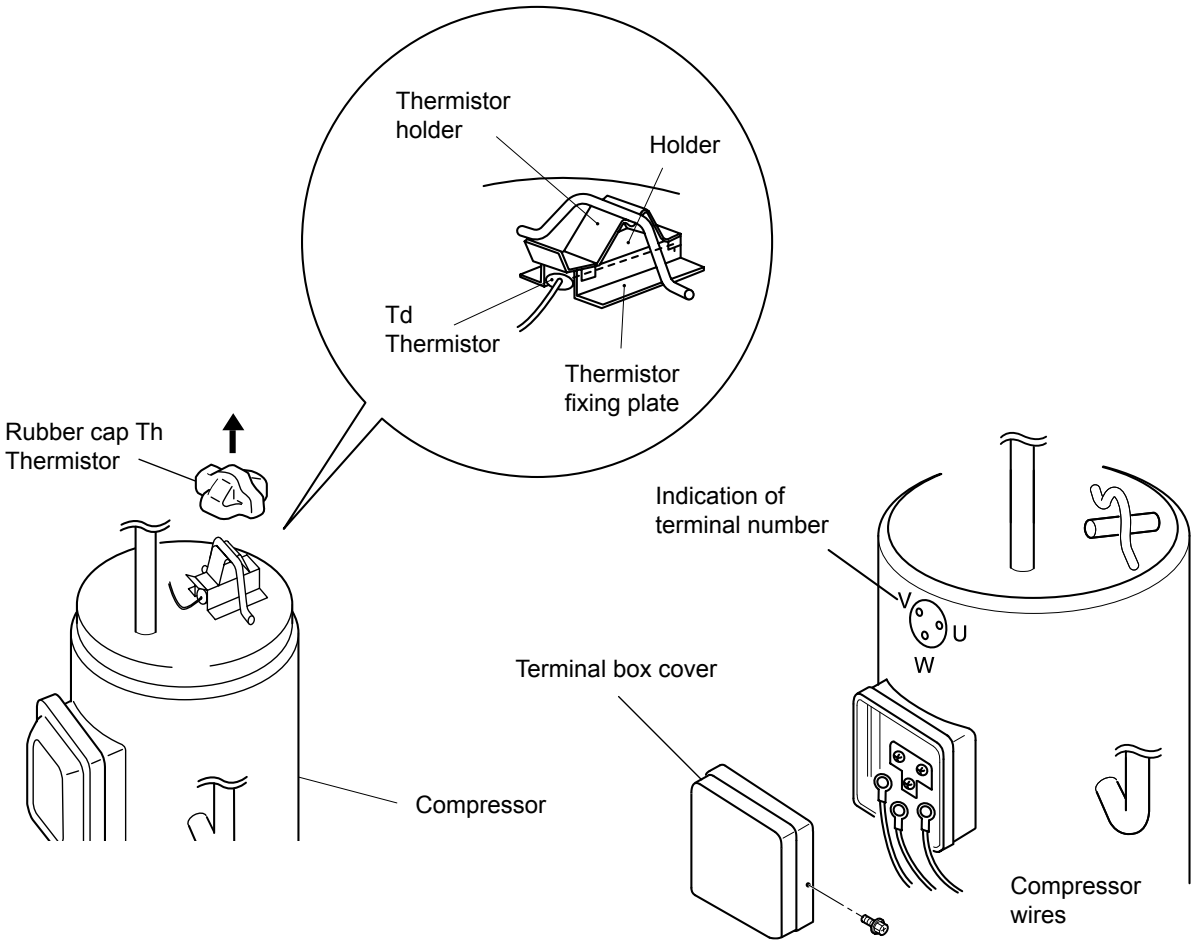


Details for compressor terminals

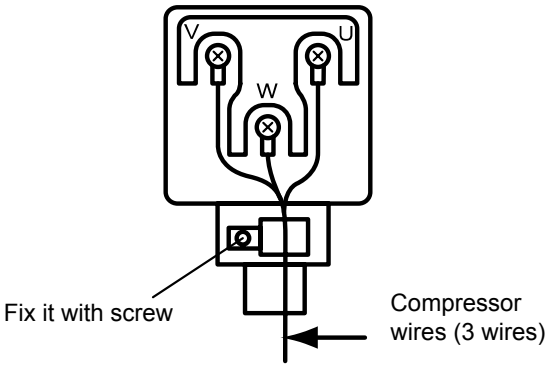


| NOTE |
|---|
| - *Do not expose the refrigerant cycle to the atmosphere for a long period in order to avoid water and foreign particles entering into the refrigerant cycle. After removing the compressor, replace it quickly. If it is exposed to the ambiance for a long period, seal both suction and discharge pipes.*<br>- *Remove the cap for the compressor just before replacing the compressor. Before assembling the compressor, seal the suction pipe and discharge pipe with tape to protect the compressor interior from foreign particles. Remove the tape when connecting the pipes.* |

| WARNING |
|---|
| - *Flamable objects. Fire risk. All compressor pipes must be brazed to be connected to the refrigerant circuit. Ensure that all the sourrounding is free of flammable objects and liquids when performing piping brazing work.* |



Все каталоги и инструкции здесь: https://splitsystema48.ru/instrukcii-po-ekspluatacii-kondicionerov.html

5. Remove the crankcase heater.(Oil heater on the lower case).

6. Remove the suction pipe and the discharge pipe from the compressor. Isolate the wires and electrical components to protect them from the burner flame when brazing the connection pipes.

7. Remove the two (2) nuts fixing the compressor and remove the compressor from the unit by lifting it. Slightly incline it forward and lift.

8. For brazing the compressor connection pipes, first cool down the compresor piping side covering it with wet cloth. Then brazing material will not enter into the compressor. If the brazing material enters the compressor, it will cause compressor failures.

9. Reassemble the parts in the reverse order of the indicated removing procedures.
   - Tighten the screws (U, V and W) for compressor wires with 2.5N.m.
   - Fix the lead wire firmly.

| | NOTE |
|---|---|
| | - *Fix the lead wire for the compressor firmly using a cable tie to avoid the contact between the metal sheet sharp edges and the high temperature piping.* |

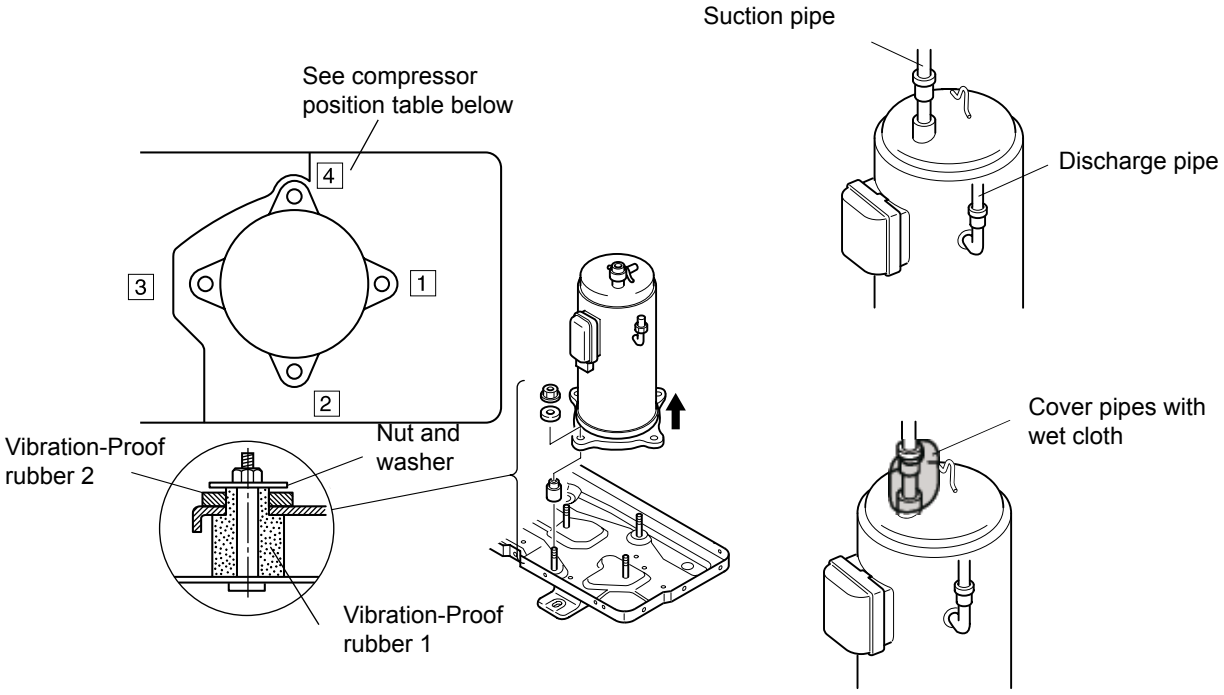


| Fixation of the compressor to the bottom plate | | | | |
|---|---|---|---|---|
| **Compressor position** | **1** | **2** | **3** | **4** |
| Vibration-proof rubber 1 | ○ | ○ | ○ | ○ |
| Vibration-proof rubber 2 | ○ | ○ | – | – |
| Nut | ○ | ○ | – | – |



Все каталоги и инструкции здесь: https://splitsystema48.ru/instrukcii-po-ekspluatacii-kondicionerov.html

## 9.1.8. Removing high pressure switch

1. Remove the service cover according to the section “Removing service cover” in this chapter.

2. Collect the refrigerant from the check joint according to the section “Removing the compressor” in this chapter.

3. Disconnect the faston terminals from the pressure switch.
   - Cut the high pressure switch from the brazing neck using a burner.

| | WARNING |
|---|---|
| | - *High pressures. Explosion risk.*<br>  - *Do not change the high pressure switch locally or change the high pressure cut-out set value locally. If changed, it will cause serious injury or death due to explosion.*<br>  - *Do not attempt to turn service valve rod beyond its stop.* |

High pressure switch structure

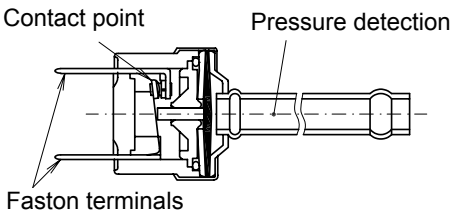

Все каталоги и инструкции здесь: https://splitsystema48.ru/instrukcii-po-ekspluatacii-kondicionerov.html

## 9.1.9. Opening electrical box (P-mounting plate)

1. Remove the service cover according to the section "Removing the service cover" in this chapter.
   - Remove the five (5) screws fixing the electrical box. Open the P-mounting plate by rotating it 90 degrees to the left.

| | DANGER |
|---|---|
| - *Electrical hazard. Risk of death.*<br>  - *Check that the LED201 (red) located on the inverter module is OFF when opening the P-mounting plate.*<br>  - *Do not touch the electrical components when LED201 (Red) located on the inverter module is ON in order to avoid an electrical shock.* | |

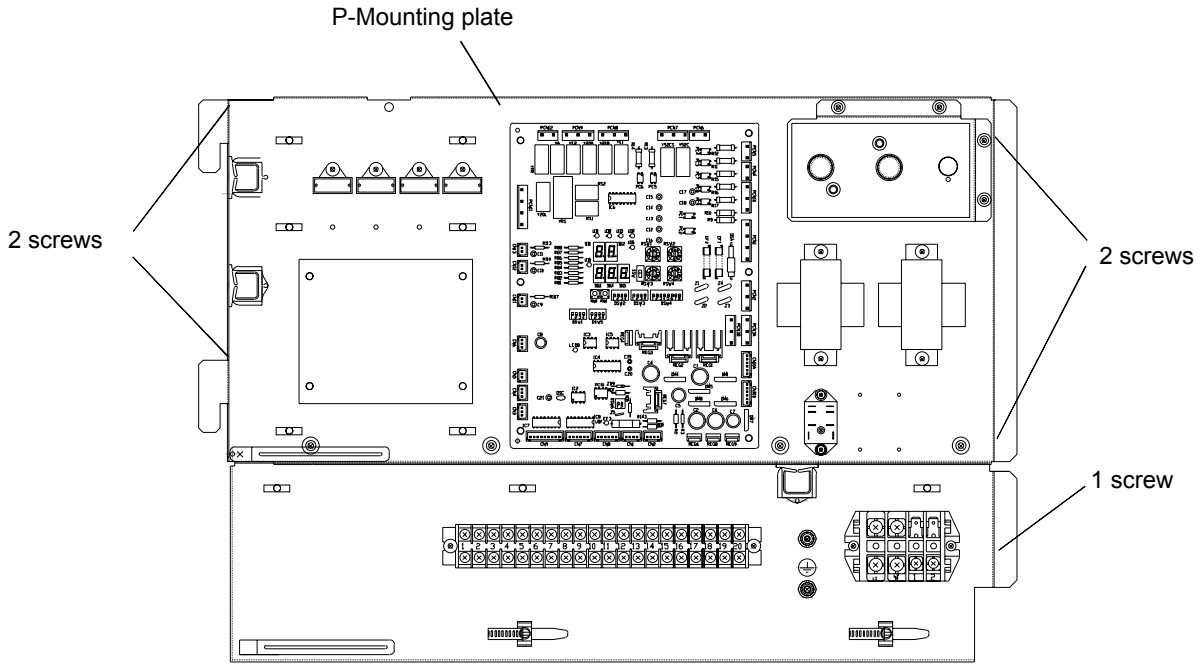




Все каталоги и инструкции здесь: https://splitsystema48.ru/instrukcii-po-ekspluatacii-kondicionerov.html

## 9.1.10. Removing the coils for the reversing and solenoid valves

1. Remove the service cover according to the section “Removing service cover” in this chapter.

2. Remove the reversing and solenoids valve coils by removing the screw fixing the coil.

| | WARNING |
|---|---|
| - | *Electrical hazard. Risk of electrical shock. Do not touch the electrical components when the LED201 (Red) located on the inverter module is ON in order to avoid electrical shock.* |

3. Remove the connector on the control PCB of the electrical box.

| | NOTE |
|---|---|
| - | *Remove the connectors on the control PCB of the electrical box.* |

Все каталоги и инструкции здесь: https://splitsystema48.ru/instrukcii-po-ekspluatacii-kondicionerov.html

## 9.1.11. Removing electronic expansion valve coils

1. Remove the service cover according to the section “Removing service cover”.

| | DANGER |
|---|---|
| | - *Electrical hazard. Risk of death.*<br>  - *Check that the LED201 (red) located on the inverter module is OFF when opening the P-mounting plate.*<br>  - *Do not touch the electrical components when LED201 (Red) located on the inverter module is ON in order to avoid an electrical shock.* |

2. Remove the connector on the control PCB of the electrical box.

3. Hold the electronic expansion valve coil and slightly rotate, then pull it up. Refer to the figure below to replace the electrical valve. The lock mechanism is equipped with the expansion valve coil. Check to ensure that the expansion valve coil is locked.

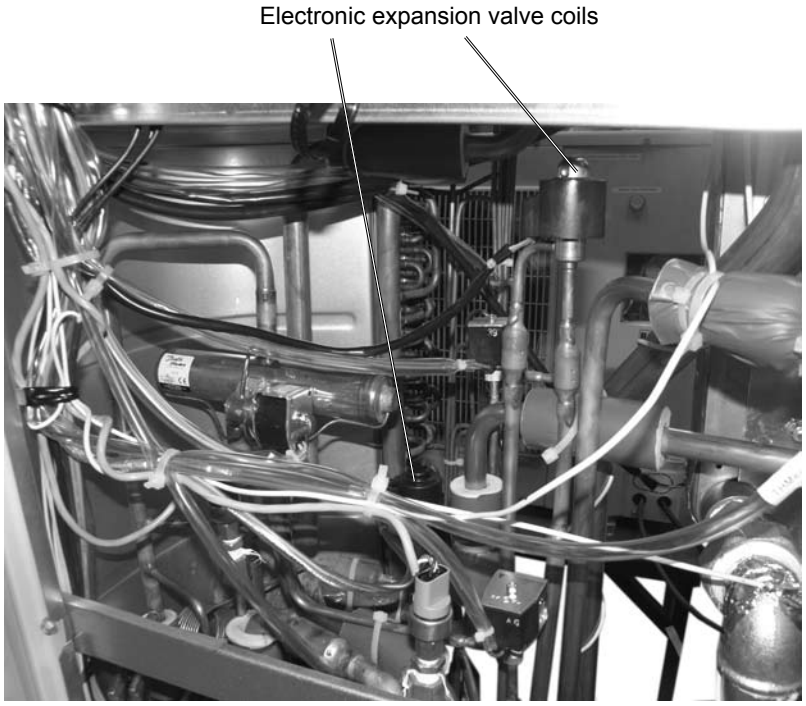




Все каталоги и инструкции здесь: https://splitsystema48.ru/instrukcii-po-ekspluatacii-kondicionerov.html

## 9.1.12. Removing pressure switches

1. Remove the service cover according to the section “Removing service cover” in this chapter.

2. There are two pressure switches: one green (low pressure) and one black (high pressure).

3. Remove the pressure switches

| | |
|---|---|
| | ***WARNING*** |
| - *Electrical hazard. Risk of electrical shock. Do not touch the electrical components when the LED201 (Red) located on the inverter module is ON in order to avoid electrical shock.* | |

4. Remove the connector on the control PCB of the electrical box.

| | |
|---|---|
| | ***NOTE*** |
| - *Remove the connectors on the control PCB of the electrical box.* | |

Pressure switches

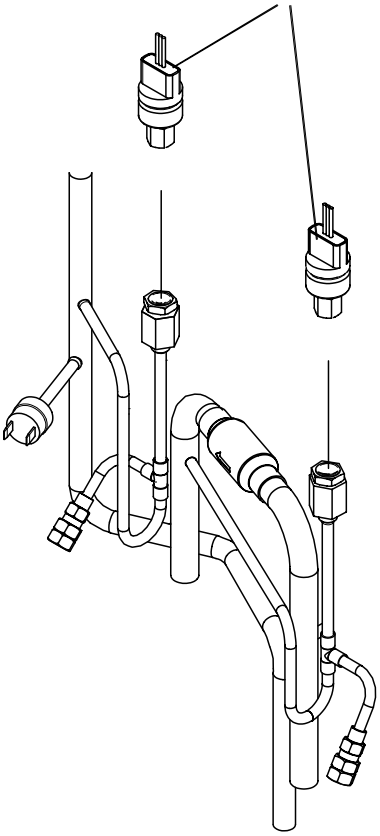

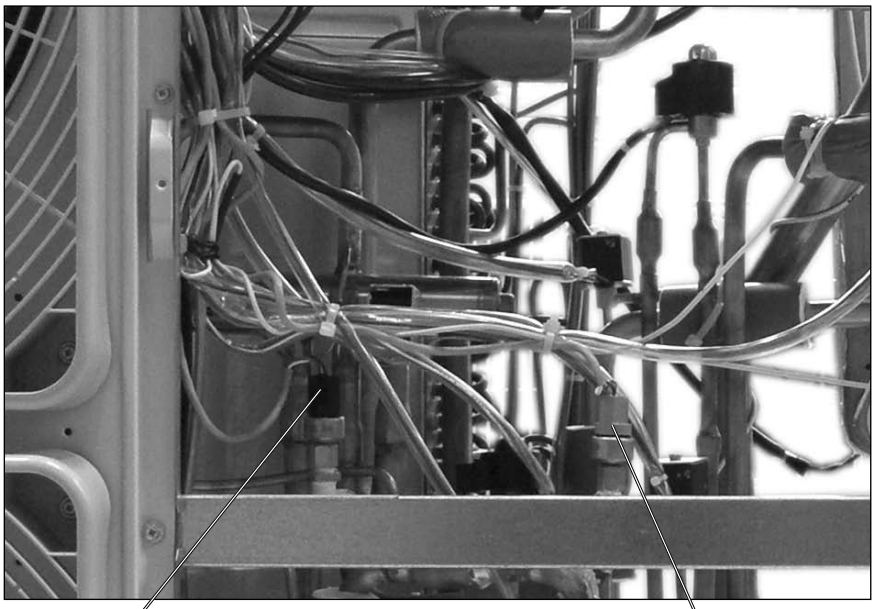

Pressure switch (Black, high pressure)

Pressure switch (Green, low pressure)



Все каталоги и инструкции здесь: https://splitsystema48.ru/instrukcii-po-ekspluatacii-kondicionerov.html

## 9.1.13. Removing reversing valve

1. Remove the service cover and the rear service panel according to the section “Removing Service Cover” and the section “Removing lower part of service panel and rear service panel”in this chapter.

2. Collect the refrigerant from the check joint according to the section “Removing compressor”.

3. Remove the reversing valve coil according to the section “Removing reversing valve coil”.

4. Remove one (1) fixing screw for the valve-mounting plate.

5. Remove the stop valve at the gas side from the valve-mounting plate by removing the two (2) screws.

6. Remove the reversing valve assemblies from the 4 brazed parts where it is fixed. Remove the brazing of the reversing valve and the stop valve at the gas using a blowtorch. Cool down the piping side covering it with wet cloth, in order to avoid brazing material entering the reversing valve. Protect the connecting wires and pipe insulation from the brazing frame.

7. Remove the reversing valves from its assemblies 4 brazed parts ※.

   Perform the brazing with a blowtorchto remove and reassemble the reversing valve by cooling the pipes first with wet cloth in order to avoid brazing material entering the reversing valve.

8. Reassemble the parts in the reverse order of removing procedures contained in this chapter. When SFV is removed, fix it according to the section “Removing the Reversing Valve and the Solenoid Valve”contained in this chapter.

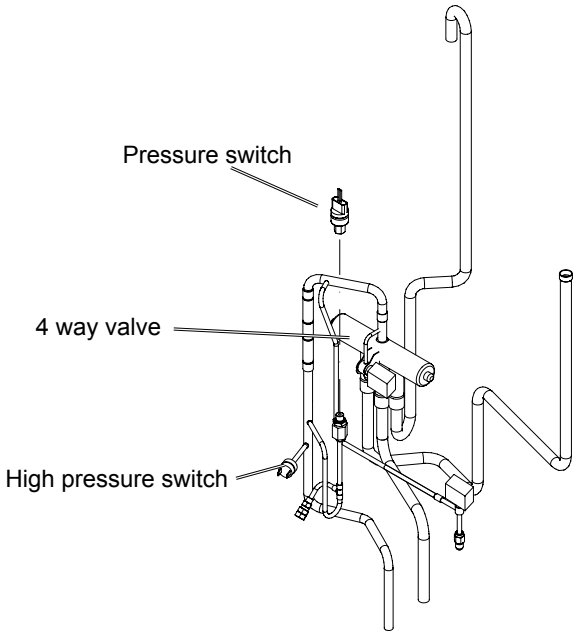


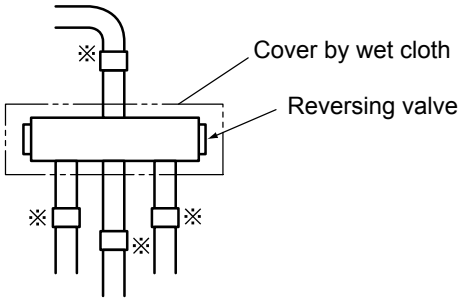


## 9.1.14. Removing expansion valves

1. Remove the service cover and rear service panel according to the section “Removing Service Cover” and the section “Removing Lower Part of Service Panel and Rear Service Panel”.

2. Collect the refrigerant from the check joint according to the section “Removing Compressor”.

3. Remove the coils according to the section “Removing Electronic Expansion Valve Coil”.

4. Remove the brazing as shown in the figure below.

   Electronic Expansion Valve: 2 brazing parts.

   Perform the brazing to remove and reassemble the electronic expansion valve by cooling with wet cloth.

   Protect the connecting wires and pipe insulation from brazing flame.

5. Reassemble the parts in the reverse order of removing procedures.

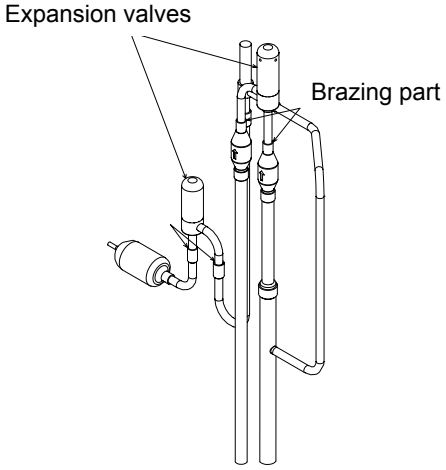




Все каталоги и инструкции здесь: https://splitsystema48.ru/instrukcii-po-ekspluatacii-kondicionerov.html

## 9.1.15. Removing solenoid valve

1. Remove the service cover and the rear service panel according to the sections “Removing Service Cover” and “Removing lower part of service panel and rear panel”, described in this chapter .

2. Collect the refrigerant from the check joint according to the section “Removing compressor” in this chapter.

3. Remove the solenoid valve coil according to the section “Removing coils for reversing valve and solenoid valve (SVA1, SVA2 and SVF)” in this chapter.

4. Remove the brazing and flare nuts as shown in the figure below. Using a blowtorch and previously cooling the pipe side with wet cloth in order to avoid brazing material entering the reversing valve.

   - Solenoid Valve (SVA1): 2 brazing parts
   - Solenoid Valve (SVA2): 2 brazing parts

5. Perform the brazing to remove and reassemble the solenoid valve.

6. Protect the connecting wires and pipe insulation from the brazing flame.

7. Remove the flare nuts with two spanners to avoid twisting.

8. Reassemble the parts in the reverse order of removing order of removing procedures.

   Fix the solenoid valve SVF as shown in the figure below.

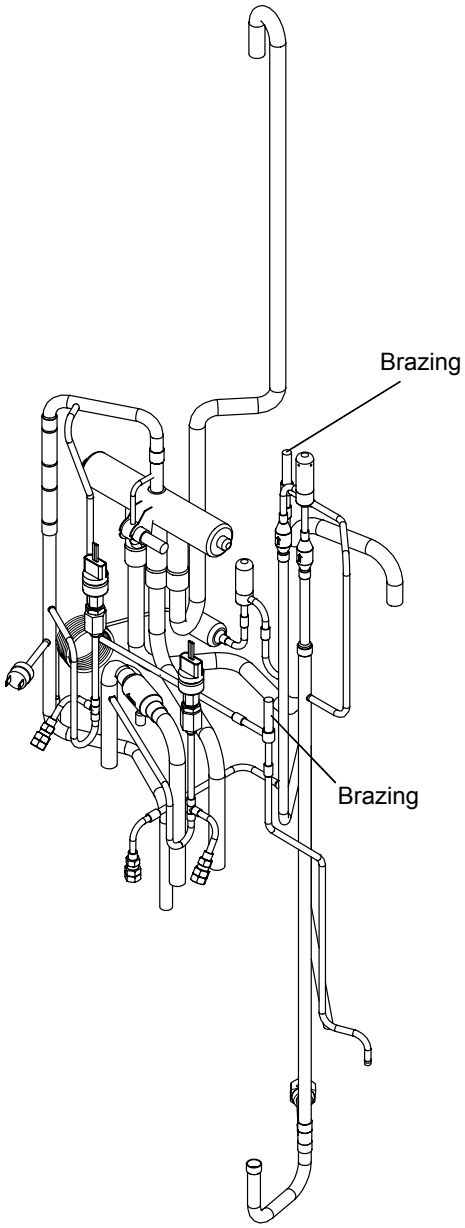



Все каталоги и инструкции здесь: https://splitsystema48.ru/instrukcii-po-ekspluatacii-kondicionerov.html

## 9.1.16. Removing electrical components

| | DANGER |
|---|---|
| | - *Electrical hazard. Risk of death.*<br>  - *Check that the LED201 (red) located on the inverter module is OFF when opening the P-mounting plate.*<br>  - *Do not touch the electrical components when LED201 (Red) located on the inverter module is ON in order to avoid an electrical shock.* |

1. Remove the service cover according to section "Removing service cover" in this chapter.
   - Disconnect all the connectors in the PCB.
   - Remove the PCB by sliding four (4) holders in the arrow direction.
   - Remove the PCB for power distribution of the compressor and the motor.

2. Removing the relay PCB
   - Remove the service cover according to the section "Removing Service Cover" in this chapter.
   - Disconnect all the wires connected to the relay PCB.

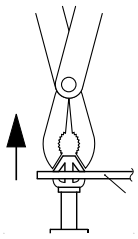

Extraction of the PCB from the holders

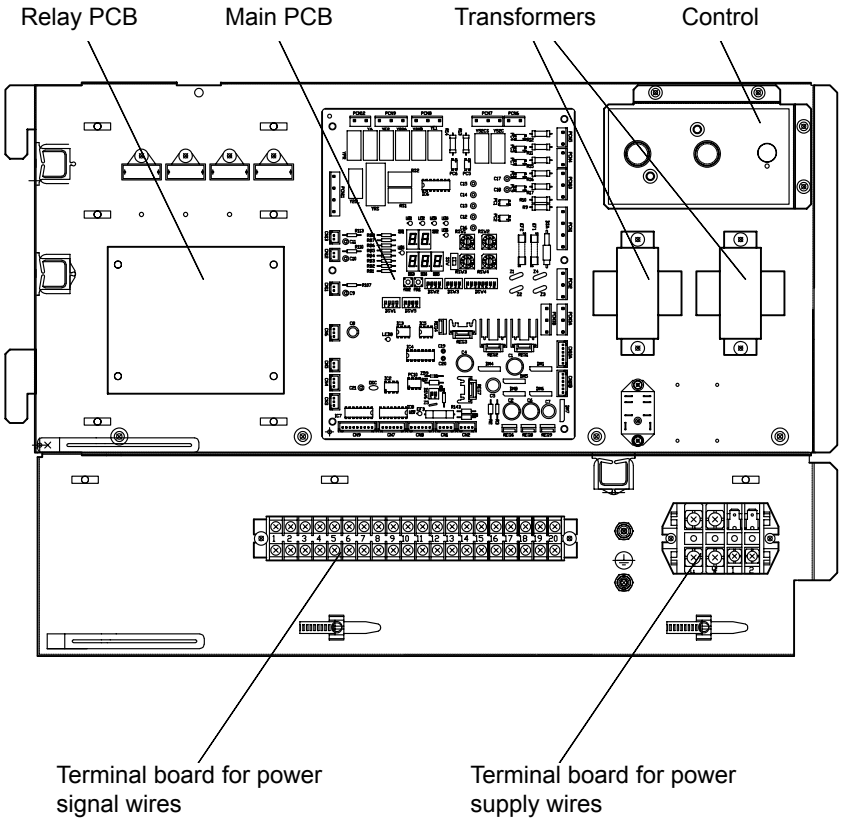




Все каталоги и инструкции здесь: https://splitsystema48.ru/instrukcii-po-ekspluatacii-kondicionerov.html

## 9.1.17. Removing inverter components

1. Remove the service cover according to the section “Removing service cover” in this chapter.

2. Open the P-mounting plate by rotating 90 degrees to the left according to the section “Opening electrical box (P-Mounting Plate)” in this chapter.

**DANGER**

- *Electrical hazard. Risk of death.*
  - *Check that the LED201 (red) located on the inverter module is OFF when opening the P-mounting plate.*
  - *Do not touch the electrical components when LED201 (Red) located on the inverter module is ON in order to avoid an electrical shock.*

- **Removing the relay PCB**

  Check to ensure that the LED201 (Red) of the PCB is OFF.

  Remove holders from the PCB. When reassembling the components, pass those holders again through the holes of the PCB.

**WARNING**

- *Electrical hazard. Risk of electrical shock.Do not touch the electrical parts when LED201 (Red) located on the inverter module is ON to prevent from an electrical shock.*

**CAUTION**

- *Several hazards. Risk of malfunction.*
  - *Identify the terminal numbers with mark band. When reassembling, the terminals have to be connected to the correct numbers . If incorrectly connected, malfunctions or damages will occur.*
  - *For safety reason, remove the connectors on the control PCB of the electrical box.*
  - *Correctly insert two wires of U and V phases for the power cable of inverter compressor into the current sensor, CTU and CTV on PCB2. Connect Phase U power cable with the current sensor Phase U (CTU) and Phase V power line with current sensor Phase V (CTV). If connected incorrectly, malfunction or electrical component damage will occur.*
  - *When mounting PCB and the sheet metal part for PCB, pay attention not to clamp the electrical wiring together.*
  - *In case of replacing control PCB, set all the dip switches as the same position before replacing. If not, malfunction may occur.*
  - *Do not apply strong force to the electric components and PCBs to avoid damage.*
  - *When replacing the transistor module (IPM) and diode module (DM) on heat radiation fin, slightly apply the heat conducting silicon grease (Manufacture: Shin-Etsu Chemical Co., Ltd, Product No.: G-746) over the fin contact surface.*

Holders

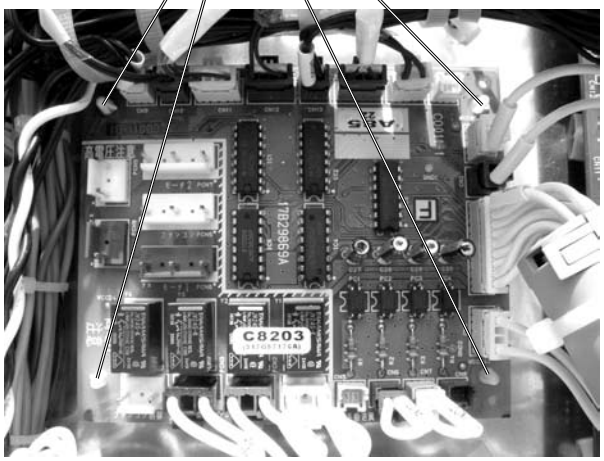


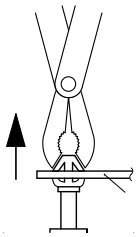

Extraction of the PCB from the holders



Все каталоги и инструкции здесь: https://splitsystema48.ru/instrukcii-po-ekspluatacii-kondicionerov.html

## 9.1.18. Removing the ISPM

The ISPM is equiped in the RHUE-(5/6)AHN unit.

**DANGER**

- *Electrical hazard. Risk of death.*
  - *Check that the LED201 (red) located on the inverter module is OFF when opening the P-mounting plate.*
  - *Do not touch the electrical components when LED201 (Red) located on the inverter module is ON in order to avoid an electrical shock.*

**NOTE**

- *Several hazards. Risk of malfunction.*
  - *Identify the terminal numbers with mark band. When reassembling, the terminals have to be connected to the correct numbers . If incorrectly connected, malfunctions or damages will occur.*
  - *Check to ensure that the electrical wires will not be caught between the mounting electrical components and the mounting plates when the PCB is remounted.*
  - *Apply silicon grease evenly on the whole rear side of the diode module and the transistor module when mounting. Silicon grease is available as a field-supplied accessory.*

1. Disconnect all the wirings connected to the module.
   - Disconnect the wirings of the terminals +,- , U, V, W

2. Disconnect all the wirings connected to the transistor module as shown below.
   - Disconnect the wirings of connector CN2, CN206 and CN207.
   - Disconnect the wirings from P, N, U, V, W on the transistor module.
   - Remove the four (4) fixing screws on the ISPM module to remove it..

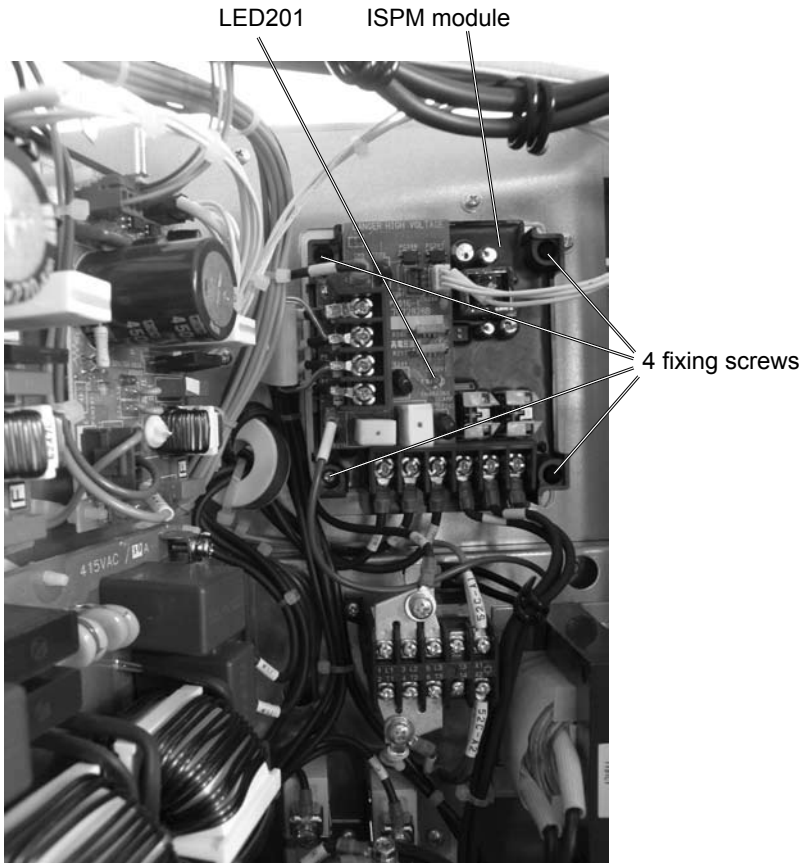




Все каталоги и инструкции здесь: https://splitsystema48.ru/instrukcii-po-ekspluatacii-kondicionerov.html

## 9.1.19. Removing the DIP-IPM

The DIP-IPM is equiped in the RHUE-(3~6)AVHN units.

**DANGER**

- *Electrical hazard. Risk of death.*
  - *Check that the LED201 (red) located on the inverter module is OFF when opening the P-mounting plate.*
  - *Do not touch the electrical components when LED201 (Red) located on the inverter module is ON in order to avoid an electrical shock.*

**NOTE**

- *Several hazards. Risk of malfunction.*
  - *Identify the terminal numbers with mark band. When reassembling, the terminals have to be connected to the correct numbers . If incorrectly connected, malfunctions or damages will occur.*
  - *Check to ensure that the electrical wires will not be caught between the mounting electrical components and the mounting plates when the PCB is remounted.*
  - *Apply silicon grease evenly on the whole rear side of the diode module and the transistor module when mounting. Silicon grease is available as a field-supplied accessory.*

1. Disconnect all the wirings connected to the module.
   - Disconnect the wirings of the terminals +,- , U, V, W
2. Disconnect all the wirings connected to the module.
   - Remove the four (4) fixing screws on the DIP-IPM module to remove it.

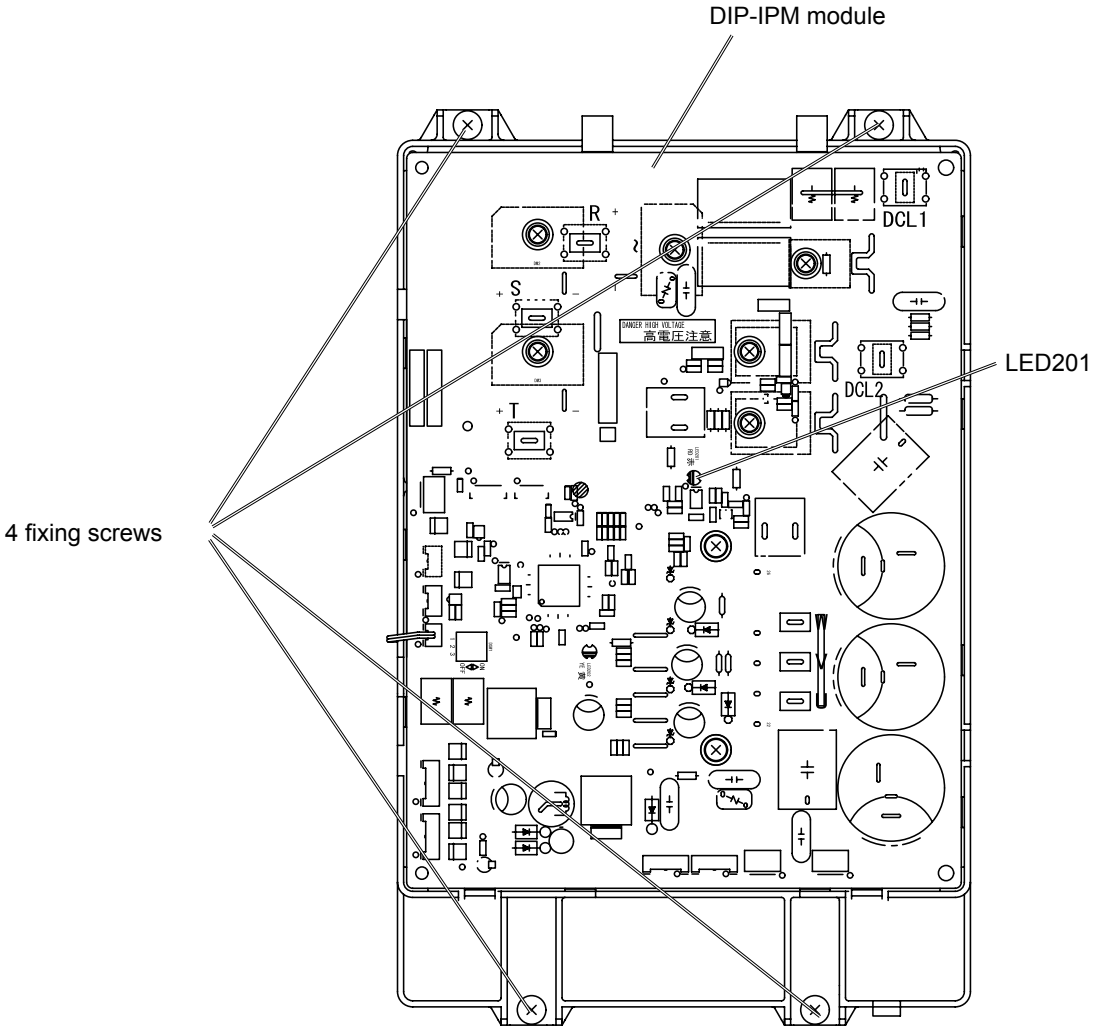




Все каталоги и инструкции здесь: https://splitsystema48.ru/instrukcii-po-ekspluatacii-kondicionerov.html

## 9.1.20. Removing the electrical-noise filter

All RHUE Yutaki units are equiped with electrical-noise filter PCB.

| | DANGER |
|---|---|
| | - *Electrical hazard. Risk of death.*<br>  - *Check that the LED201 (red) located on the inverter module is OFF when opening the P-mounting plate.*<br>  - *Do not touch the electrical components when LED201 (Red) located on the inverter module is ON in order to avoid an electrical shock.* |

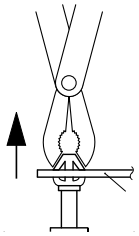

Extraction of the PCB from the holders

1. Disconnect all the wirings (9 in total) connected to the electrical-noise filter.

2. Remove the six (6) holders from the PCB. When reassembling the components, pass those holders again through the holes of the PCB.

6 plastic holders

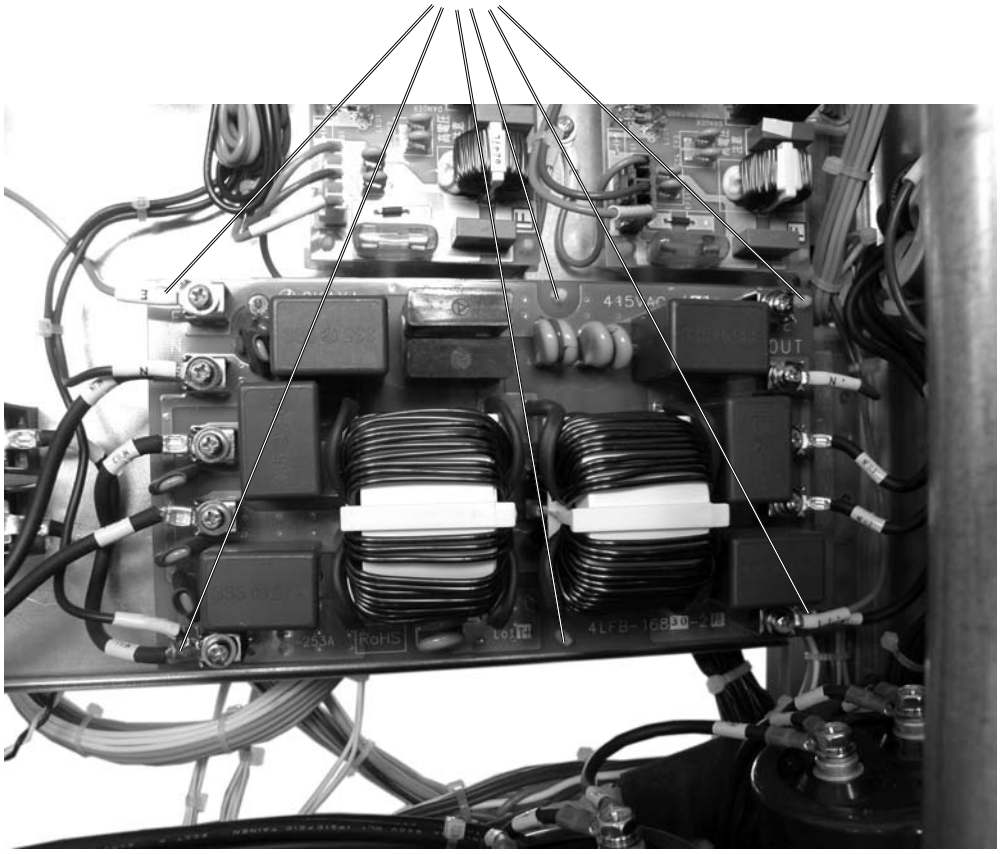



Все каталоги и инструкции здесь: https://splitsystema48.ru/instrukcii-po-ekspluatacii-kondicionerov.html

## 9.1.21. Removing other electrical components

1. Remove the service cover according to the section “Removing service cover” in this chapter.

2. Open the P-mounting plate by rotating it 90 degrees to the left according to the section “Opening electrical box (P-Mounting Plate)” in this chapter.

3. Check to ensure the LED201 (Red) of the inverter PCB is off when opening P-mounting plate.

4. Remove other electrical components according to the procedure below, and the figures on chapter 9.

| | DANGER |
|---|---|
| - *Electrical hazard. Risk of death.*<br>  - *Check that the LED201 (red) located on the inverter module is OFF when opening the P-mounting plate.*<br>  - *Do not touch the electrical components when LED201 (Red) located on the inverter module is ON in order to avoid an electrical shock.* | |

Disconnect all the wires connected with the smoothing capacitor (CB, CB1, CB2, CA).

If the wire has polar characters. Identify the wire mark band and the indication on the smoothing capacitor when wire connecting.

Remove the two (2) screws fixing the smoothing capacitor and remove the smoothing capacitor.

Disconnect all the wires connecting with the magnetic contactor (CMC1).

Remove the two (2) screws fixing the magnetic contactor and remove the magnetic contactor.

Remove the four (4) screws fixing the reactor and remove the reactor (DCL).

Disconnect all the wires connected with the electrical-noise filter (NF1).

Remove the noise filter by clamping the top of the holder (6 portions) with a pincher.

| | NOTE |
|---|---|
| - *Identify the terminal numbers with mark band. When reassembling, the terminals have to be connected to the correct numbers . If incorrectly connected, malfunctions or damages will occur.* | |



Все каталоги и инструкции здесь: https://splitsystema48.ru/instrukcii-po-ekspluatacii-kondicionerov.html

**Все каталоги и инструкции здесь:** https://splitsystema48.ru/instrukcii-po-ekspluatacii-kondicionerov.html

**Все каталоги и инструкции здесь:** https://splitsystema48.ru/instrukcii-po-ekspluatacii-kondicionerov.html

Hitachi Air Conditioning Products Europe, S.A.
Ronda Shimizu,1 - Polig. Ind. Can Torrella
08233 Vacarisses (Barcelona) España
ISO 9001 Certified by AENOR, Spain
ISO 14001 Certified by AENOR, Spain

Hitachi Air Conditioning Systems Operation
Shimizu-shi, Shizuoka-ken, Japan
ISO 9001 Certified by JQA, Japan
ISO 14001 Certified by JQA, Japan

Hitachi Air Conditioning Products (M) Sdn. Bnd.
Lot No. 10, Jalan Kemajan Bangi Industrial Estate
43650 Bandar Baru Bangi, Selangor Darul Ehsan, Malaysia
Certification ISO 9001, Malaysia
Certification ISO 14001, Malaysia

HITACHI
Inspire the Next

**SMGB0066 rev.0 - 12/2009 - Printed in Spain**

**Все каталоги и инструкции здесь:** https://splitsystema48.ru/instrukcii-po-ekspluatacii-kondicionerov.html